CATALOGUE OF PRODUCTS

antic kosta

since 1959

since 1959

antic kosta

The Best Solution for Your Home

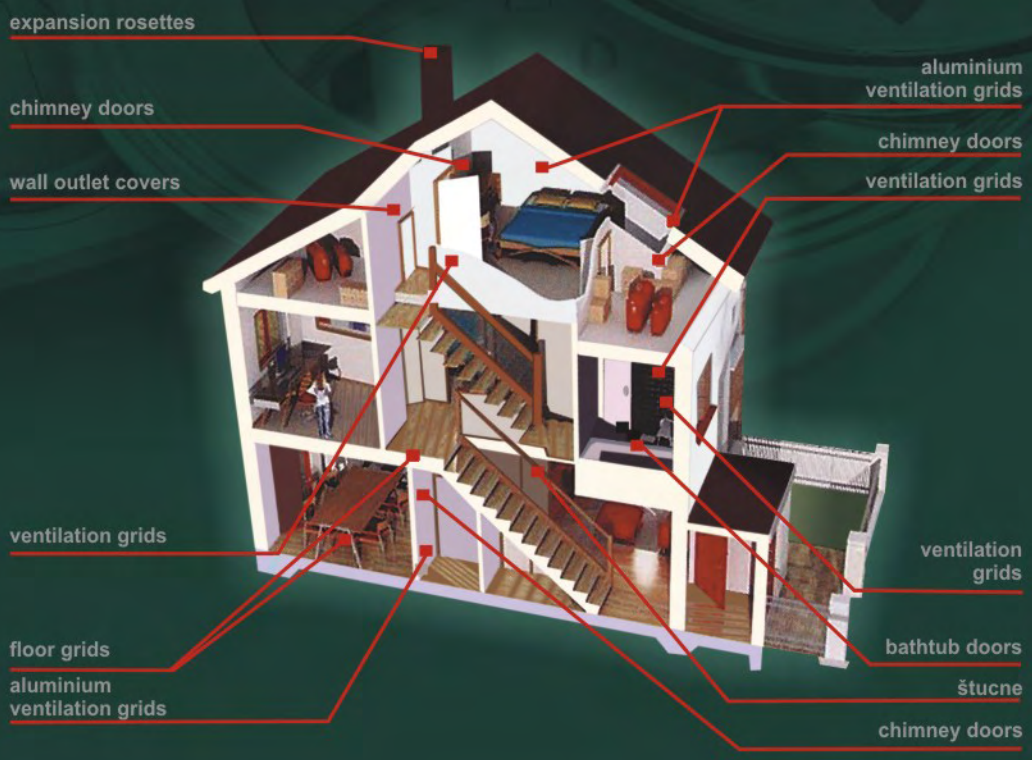

The company "Antic Kosta" was founded in 1959. in Stalac as a small workshop, and today it is a company with more than 8000 m^2 of working space, which basic occupation is production of metal haberdashery.
Long time experience, high quality of products and follow-up of new technologies led this company to the leading position among the producers of metal haberdashery in Serbia as well as in southeast Europe.
This company owns the latest equipment for this kind of products, including the superficial protection.

The products are designed in company's office, and all needed tools and equipment are projected and made in our own tool workshop in accordance to the latest requirements of the market.

The company image is based highly-skilled personell, capable to make the most complex tools by CAD/CAM technology.

By this kind of work we achieved the quantity of products, which we present to you on the following pages and it will be our pleasure, according to your inquiries, to develop even new products.

PRODUCTS

AL.1 Aluminium wall ventilation grids 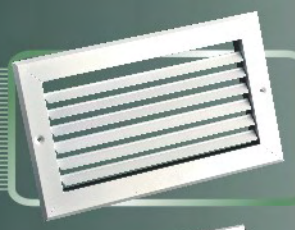 4

AL.2 Aluminium ceiling ventilation grids 6

C.1 Wall outlet covers 8

C.2 Chimney doors 12

C.3 Ventilation grids, inserted 26

C.4 Expansion rosettes 36

IN.1 Floor grids 38

IN.2 Bathtub doors 50

IN.3 Ventilation grids,corossion resistant stell plates 54

ALUMINIUM VENTILATION GRIDS

since 1959.

antic kosta

ELEMENTS FOR CENTRAL AIR-CONDITIONING, DISTRIBUTION AND AIR CONTROL

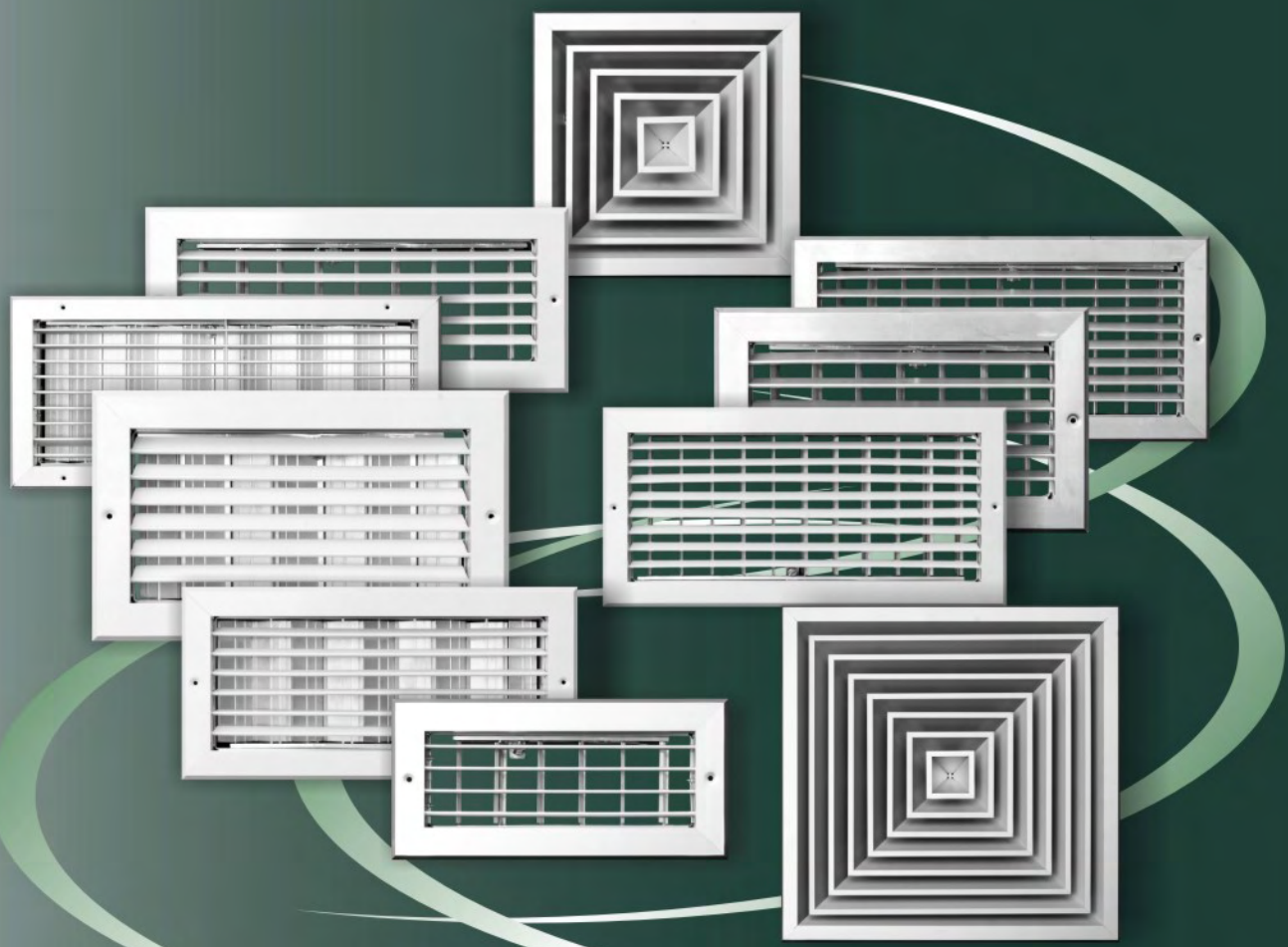

Aluminium ventilation grids are fitted-in to apartment houses and business premisses which are air conditioned. They serve to distribute air from or into room, and they are connected to central air-conditioning system through air canals.

Completely made of aluminium, anodized in natural color or plastificated in Ral white color, therefore functional and estetic longevity of the grid is provided.

There are two basic types of grids: grids with and grids without flow regulator; depending to air-conditioning design for each certain room.

AL.1 Aluminium wall ventilation grids

ALUMINIUM VENTILATION GRIDS

AL.2 Aluminium ceiling ventilation grids

ALUMINIUM WALL VENTILATION GRIDS

AL.1.ZR
Aluminium wall ventilation grids whithout flow regulator

ELEMENTS FOR CENTRAL AIR-CONDITIONING, DISTRIBUTION AND AIR CONTROL

Figure 1.

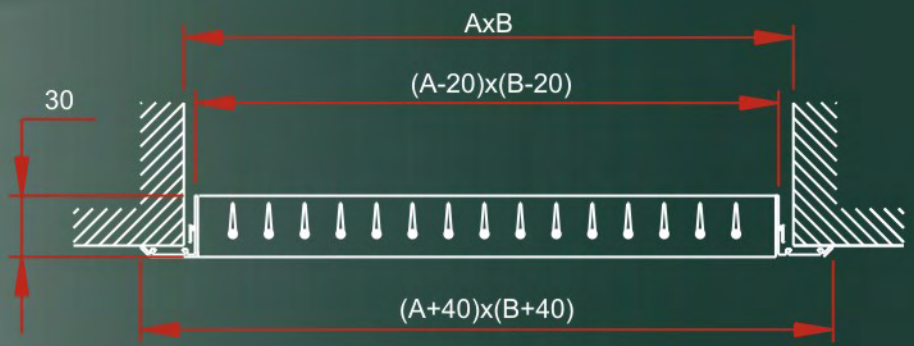

Figure 1.

Aluminium wall ventilation grids are fitted-in to air openings which are on the wall (or ceiling). Air distribution is possible in both directions (supply and drain direction).

Single-row adjustable plates are installed into a frame of a-grid with distances of 20 mm between each other. Direction of the air flow is adjusted by plates turning. Grids are made of aluminium, anodized in natural color or plastificated in Ral white color. According to client wish there is possibility for coating in all standard colors.

There are two types of wall ventilation grids: without flow regulator (figure 1) and with flow regulator (figure 2). By flow regulator, control of air flow and circulation is done.

AL.1.ZR-PR
Aluminium wall ventilation grids with flow regulator

AL.1

Figure 2.

AL.1.ZR-PR

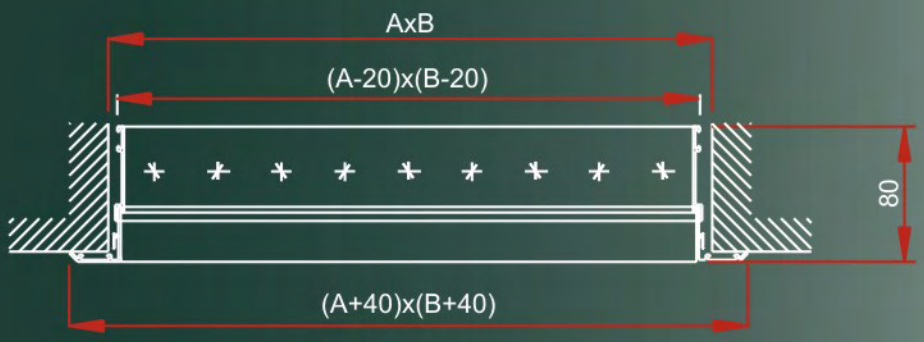

Figure 2.

Tabular review of nominal in-built measurements of wall grid with and without flow regulator

A width	200	225	250	275	300	350	375	400	425	450	475	500	525	550	575	600
B height	100	125	150	175	200	225	250	275	300	350	375	400	425	450	475	500

Weight and height ratio is possible in all combination

ELEMENTS FOR CENTRAL AIR-CONDITIONING, DISTRIBUTION AND AIR CONTROL

qualityaustria SYSTEM CERTIFIED ISO 9001:2008 No.06060/0
CERTIFIED IQNet MANAGEMENT SYSTEM

ALUMINIUM CEILING VENTILATION GRIDS

AL.2.PR
Aluminium wall ventilation grids without flow regulator

Figure 1.

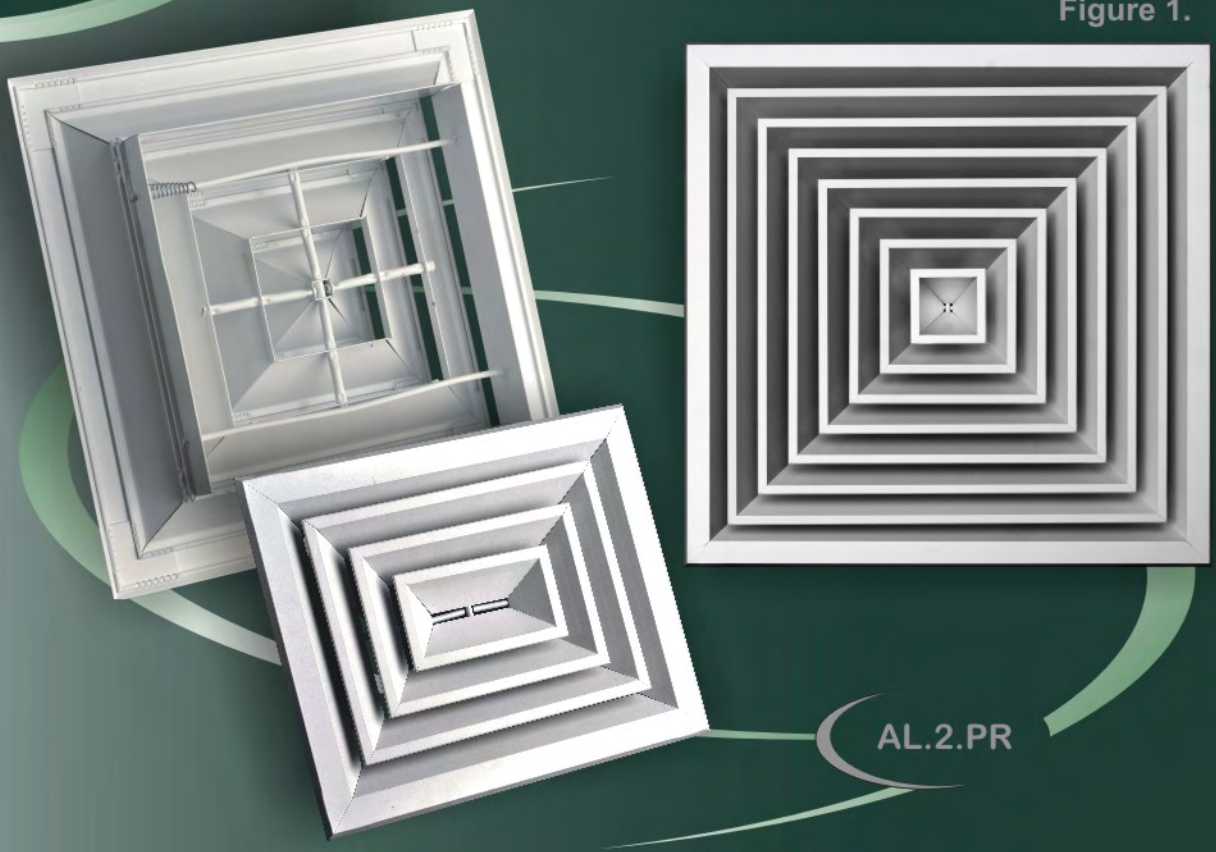

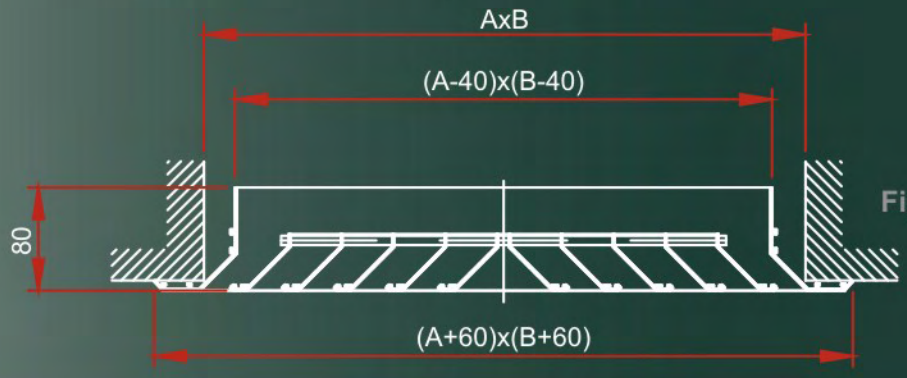

Figure 1.

Due to even distribution of air to all directions at the same time, aluminium ceiling ventilation grids are mostly used for installing into air canals placed in lowered ceiling.

On the front side of the grid is a system of fixed plates which define direction of air flow. Air distribution is possible in both directions (supply and drain direction).

There are 2 types of ceiling ventilation grids: without flow regulator (figure 1) and with flow regulator (figure 2). By flow regulator, control of air flow and circulation is done.

The grid is made of aliminium, anodized in natural color or plastificated in Ral white color. According to client wish, there is possibility for coating in all standard colors

ELEMENTS FOR CENTRAL AIR-CONDITIONING, DISTRIBUTION AND AIR CONTROL

AL.2.PR-RP
Aluminium wall ventilation grids with flow regulator

AL.2

Figure 2.

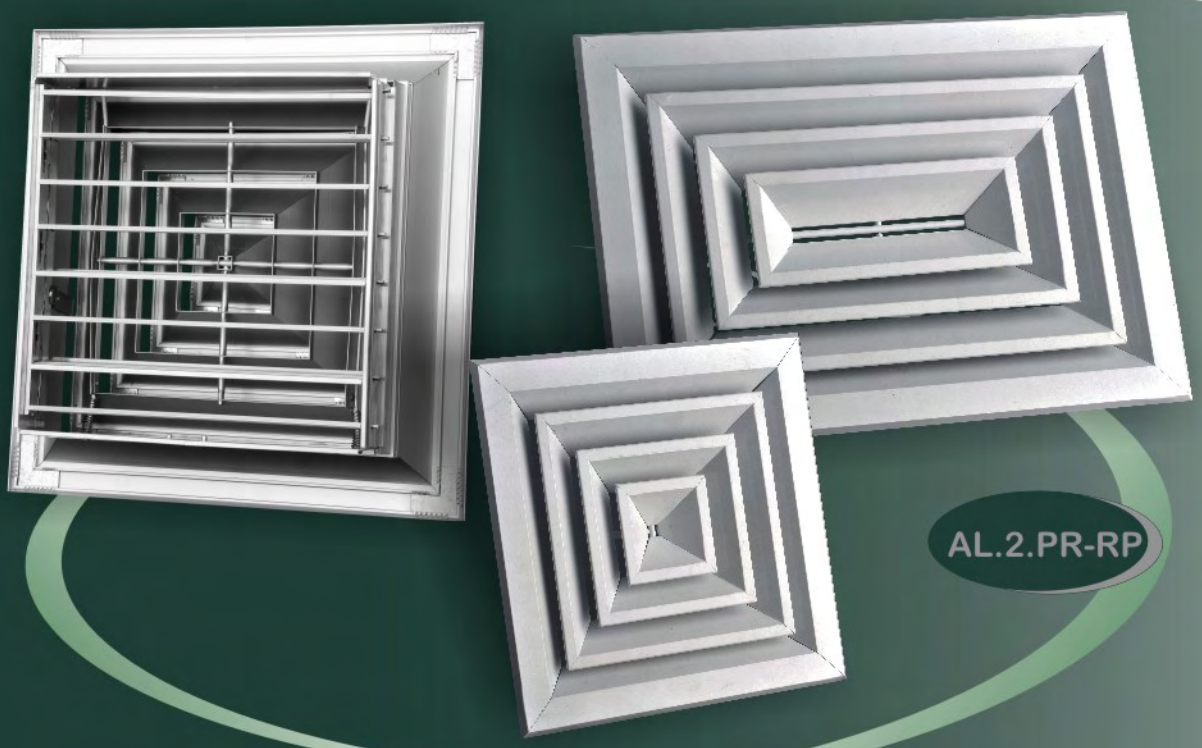

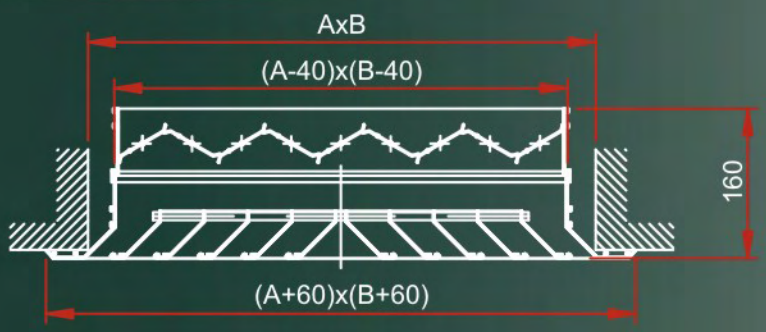

Figure 2.

Tabular review of nominal in-built measurements of wall grid with and without flow regulator

SQUARE

A width	540	470	400	335	265	195
B height	540	470	400	335	265	195

RECTANGULAR - MODEL 1

A width	605	540	470	400	335	265
B height	540	470	400	335	265	195

RECTANGULAR - MODEL 2

A width	605	540	470	400	335
B height	470	400	335	265	195

Weight and height ratio is possible in all combination

WALL OUTLET COVER C.1

since 1959.

antic kosta

Wall outlet cover is produced by procedure of deep drawing, in quality metal sheet, and the surface is protected by zinc and plastification.

Wall outlet covers are simple to fit-in, quality of metal sheet quarantees thermal durability and aesthetic look is outstanding.

Assortiment of wall outlet covers satisfies all different measurements of chimney pipes at heating technics available on the market.

qualityaustria SYSTEM CERTIFIED ISO 9001:2008 No.04040/0

CERTIFIED IQNet MANAGEMENT SYSTEM

WALL OUTLET COVER Ø118 Ø110

C.1.118

C.1.110

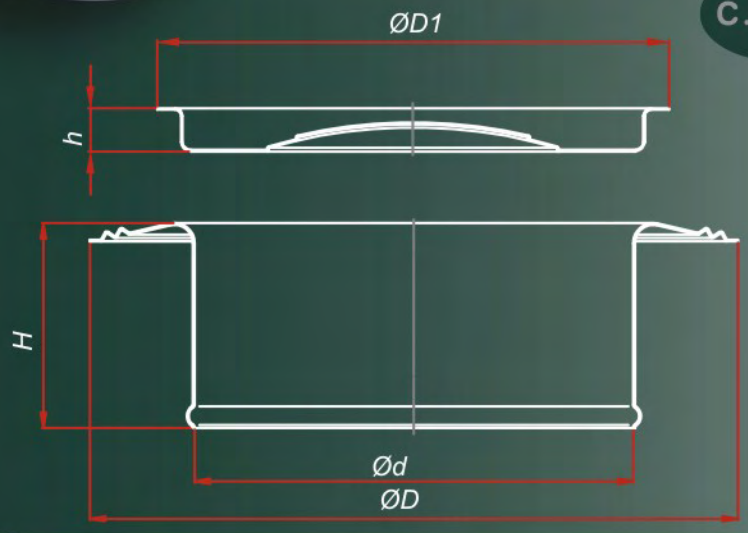

Code	Dimensions (mm)				
	d	D	H	D1	h
C.1.118	118.5	180	55/60/80	128	11.5
C.1.110	109	180	55	120	10

WALL OUTLET COVER

quality austria SYSTEM CERTIFIED ISO 9001:2008 No. 06000/0

CERTIFIED IQNet MANAGEMENT SYSTEM

BOILER'S WALL OUTLET COVERS

WALL OUTLET COVER

Code	Dimensions (mm)				
	d	*D*	H	*D1*	*h*
C.1.130	*130.5*	*180*	*60*	*148*	*14*
C.1.145	*145.5*	*215*	*66*	*159*	*14*
C.1.150	*150.5*	*215*	*66*	*159*	*14*
C.1.160	*160.5*	*235*	*78*	*174*	*14*
C.1.180	*180.5*	*256*	*77*	*193*	*14*
C.1.200	*200.5*	*280*	*81*	*214*	*14*

Wall outlet covers are zinc or plasified into white or brown color

GAS WALL OUTLET COVERS C.1.85

C.1.85R-P

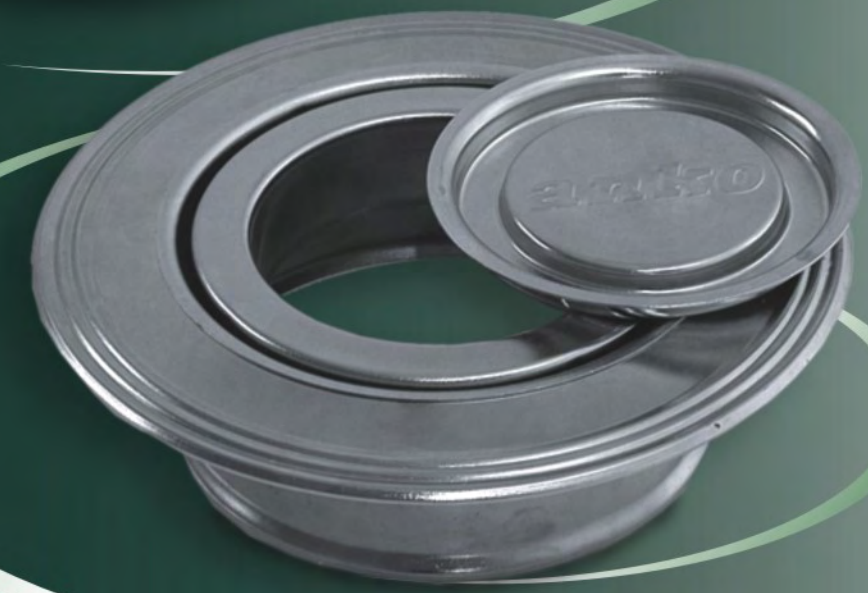

C.1.85

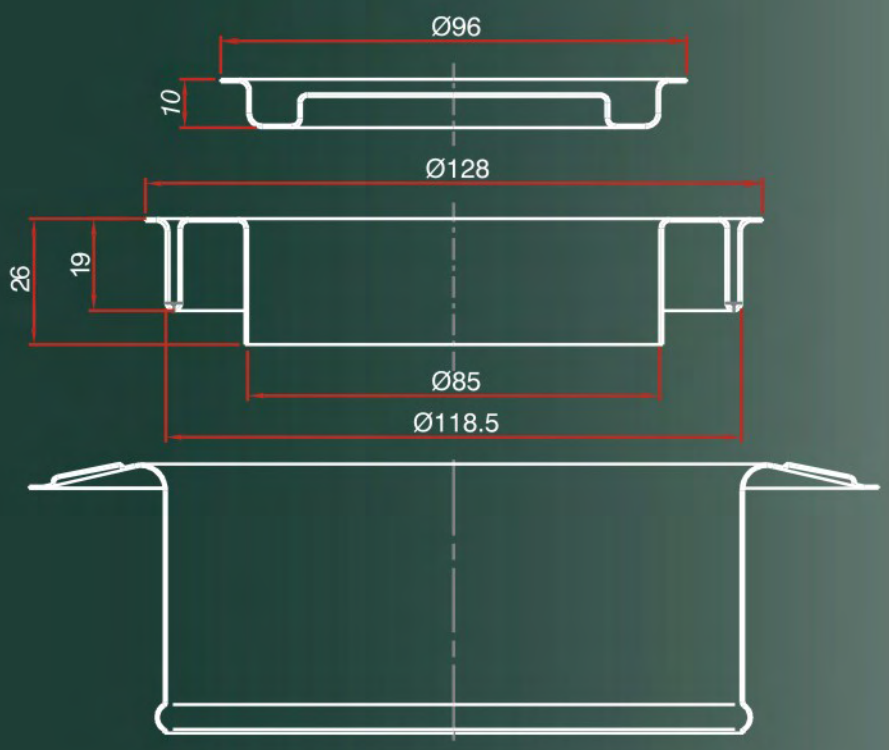

WALL OUTLET COVER

CHIMNEY DOORS

since 1959.

antic kosta

zinc

plastic

Chimney doors are fitted-in to the openings and they serve for cleaning slag from chimney.

They are made of high quality metal sheet, with surface coating which meets strict demands of corrosion protect and great aeshetic look.

Fitting-in of the frame is safe and simple, and tightening between frame and door is provided by asbestine-free plate.

CHIMNEY DOORS

qualityaustria
SYSTEM CERTIFIED
ISO 9001:2008
CERTIFIED IQNet MANAGEMENT SYSTEM

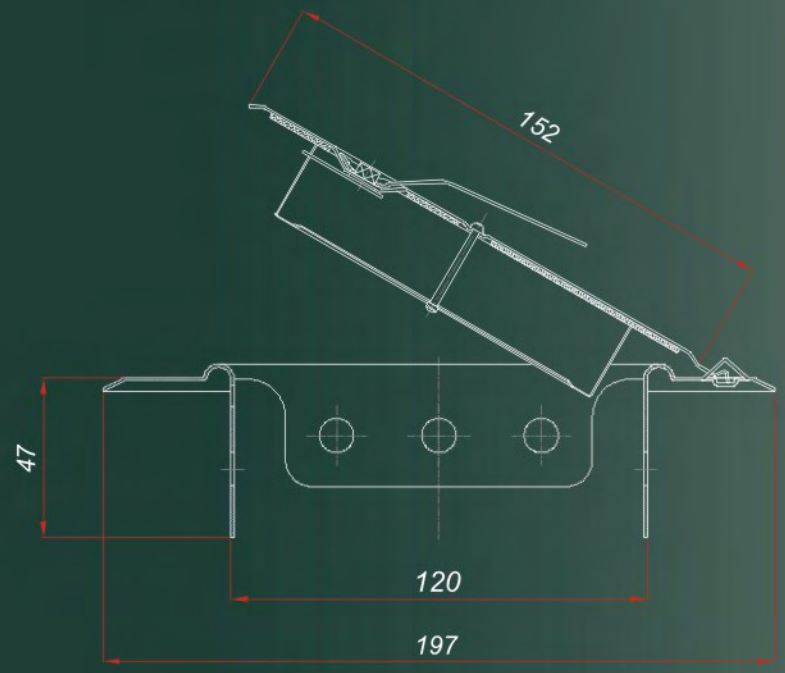
152
47
120
197

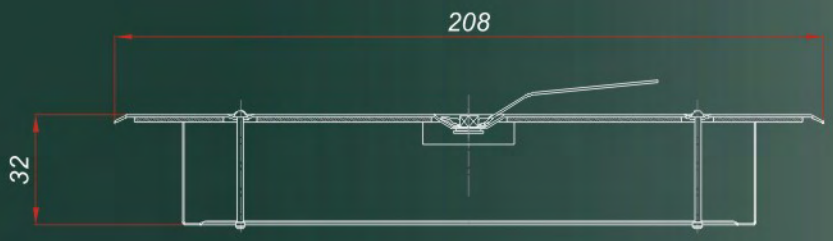
208
32

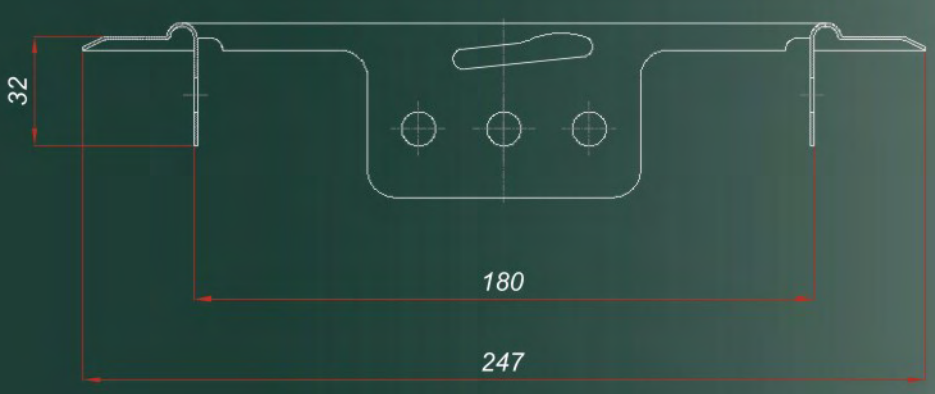
32
180
247

CHIMNEY DOORS 160x280

zinc

plastic

CHIMNEY DOORS

C.2.2

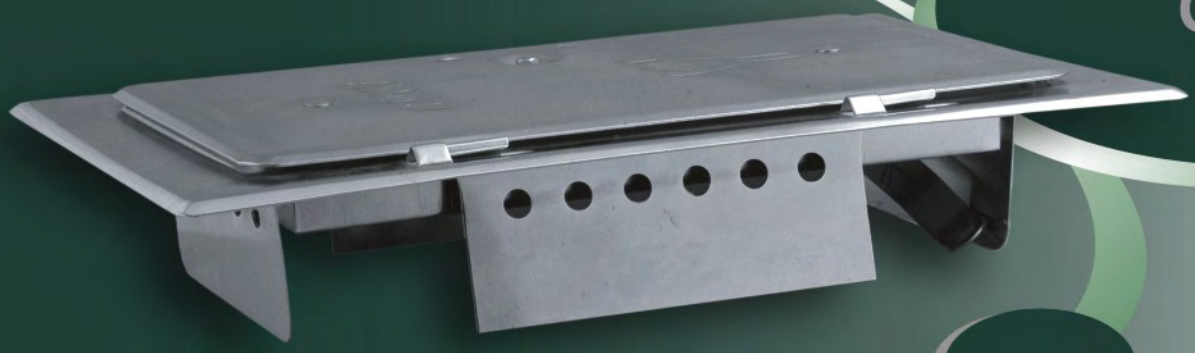

zinc

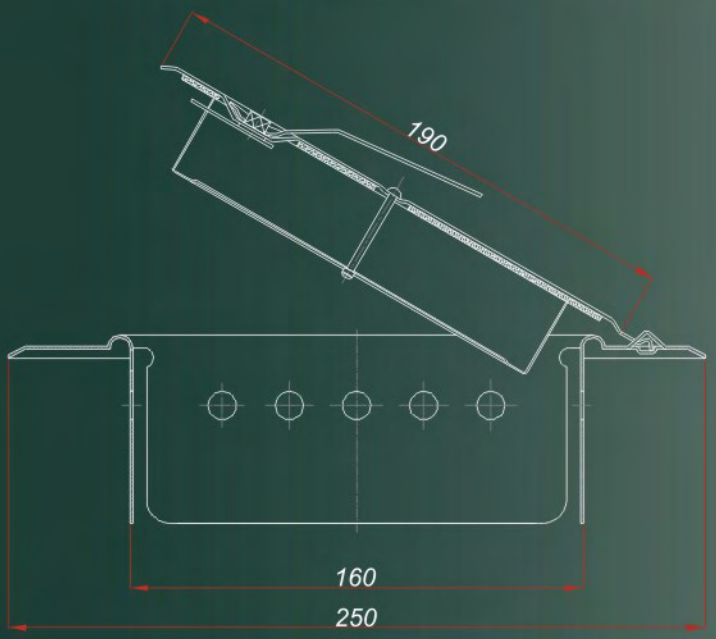

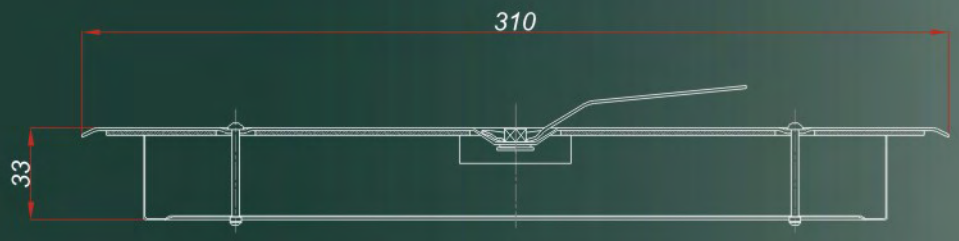

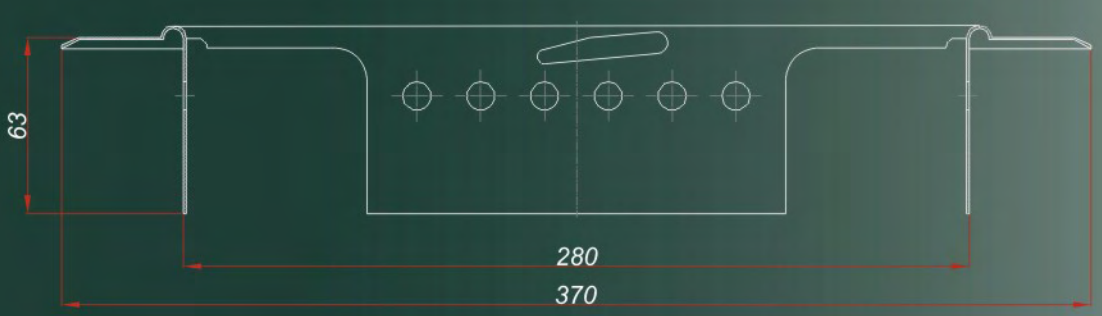

CHIMNEY DOORS FLAT 130x260

zinc

white plastic

C.2.3

brown plastic

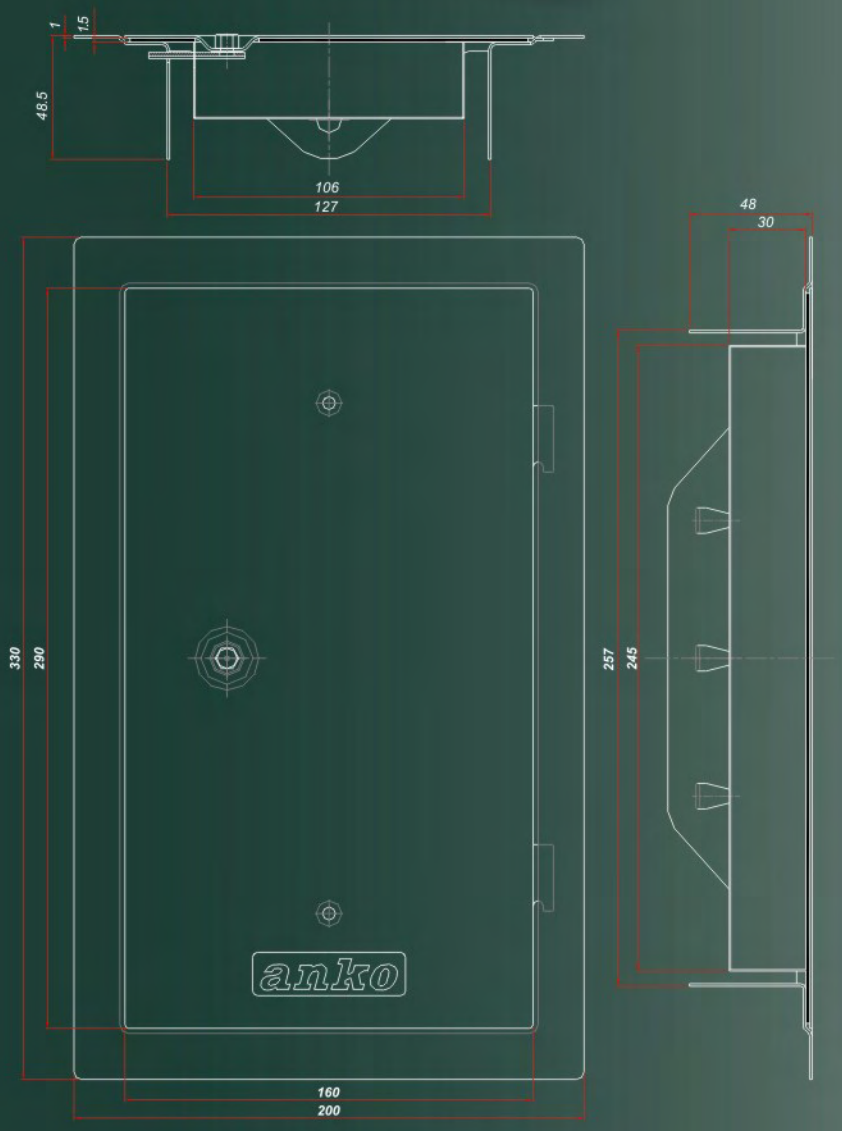

CHIMNEY DOORS FLAT 120x180

zinc

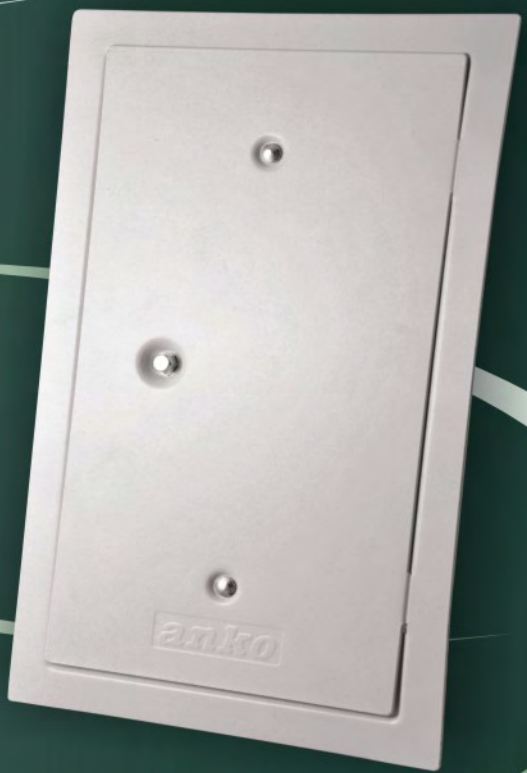

white plastic

CHIMNEY DOORS

C.2.4

brown plastic

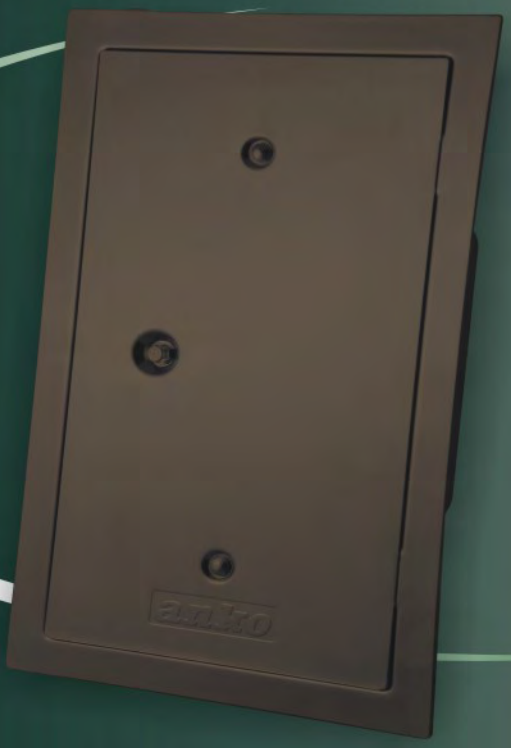

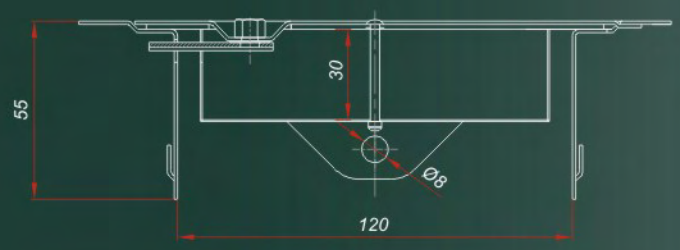

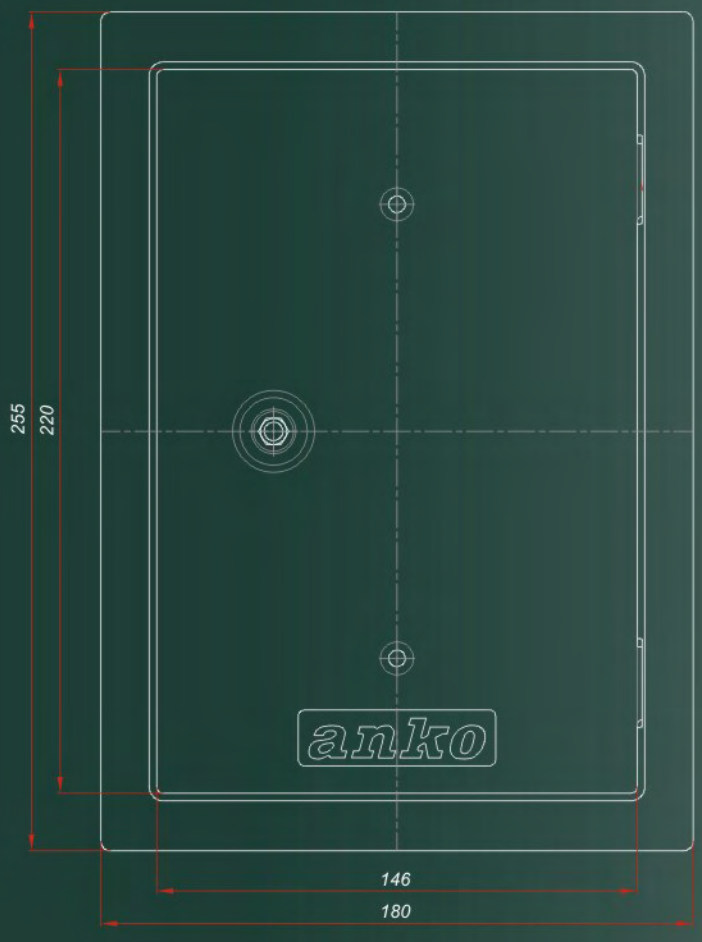

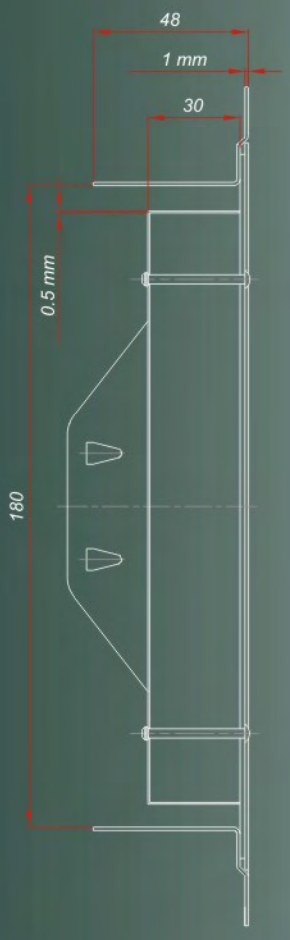

CHIMNEY DOORS

qualityaustria SYSTEM CERTIFIED ISO 9001:2008 No. 06086/0
CERTIFIED IQNet MANAGEMENT SYSTEM

CHIMNEY DOORS 120x180-ak

zinc

white plastic

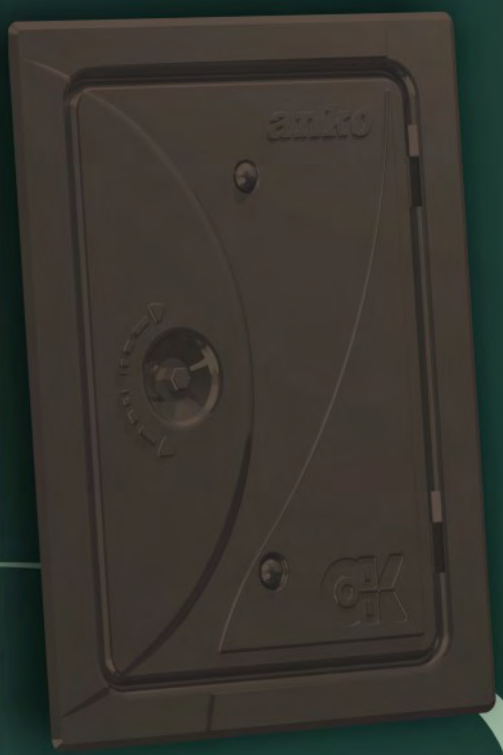

brown plastic

quality austria SYSTEM CERTIFIED ISO 9001:2008 No. 06085/0
CERTIFIED IQNet MANAGEMENT SYSTEM

C.2.5

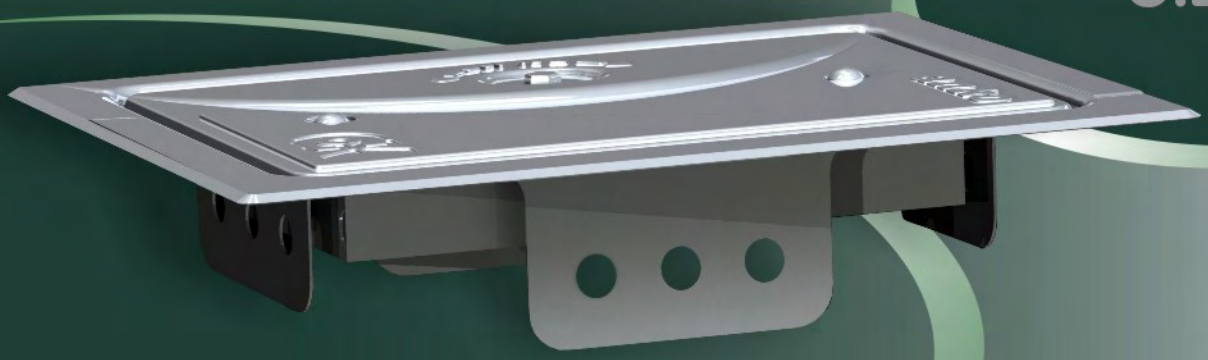

zinc

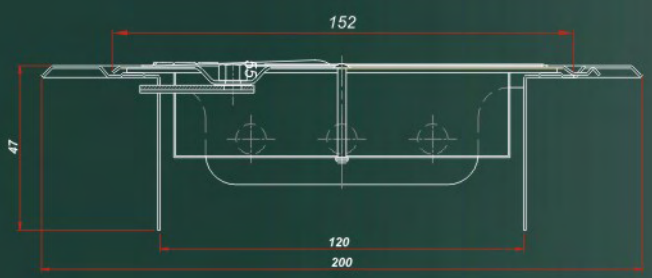

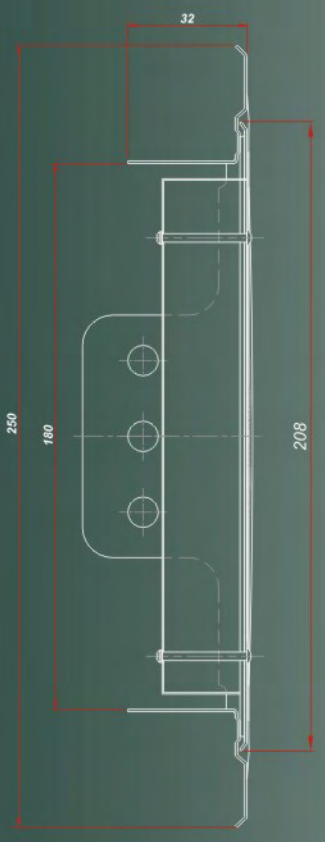

CHIMNEY DOORS

CHIMNEY DOORS 160x280-ak

zinc

white plastic

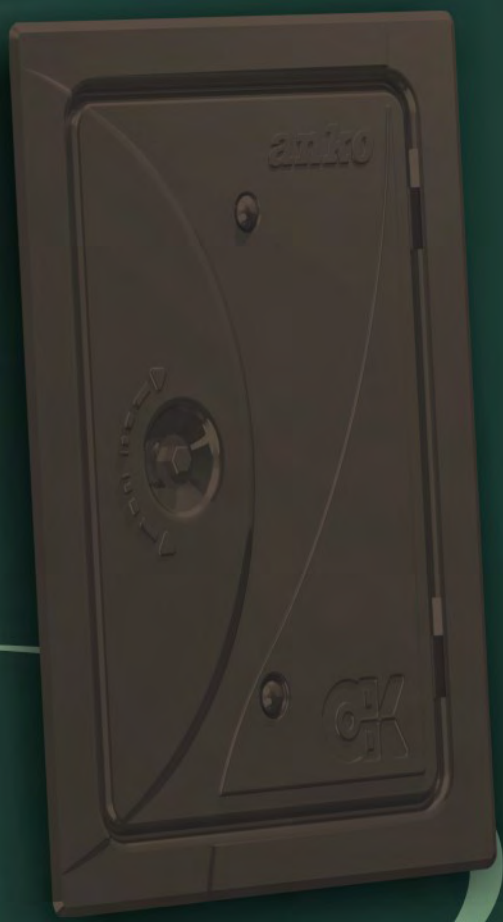

brown plastic

CHIMNEY DOORS

qualityaustria SYSTEM CERTIFIED ISO 9001:2008 No.06285/0
CERTIFIED IQNet MANAGEMENT SYSTEM

zinc

C.2.6

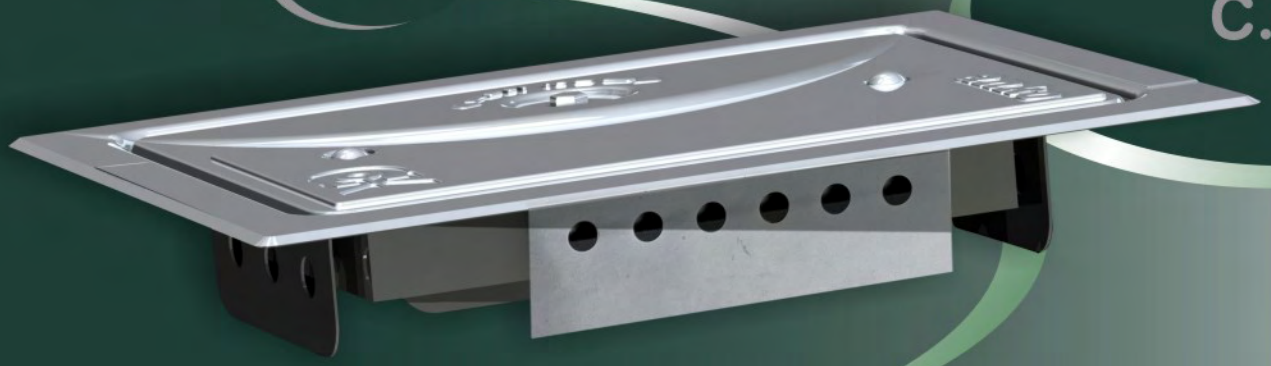

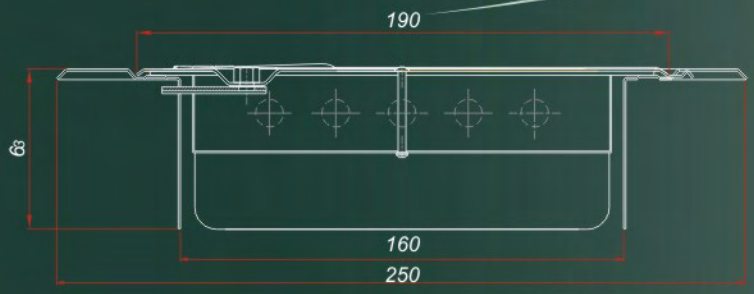

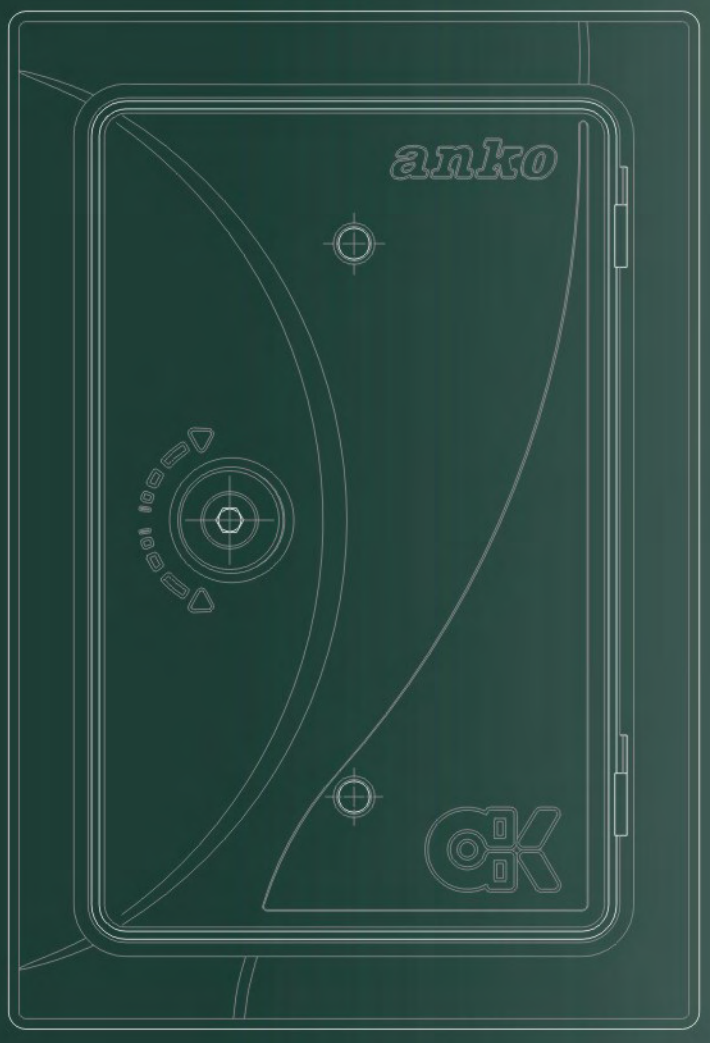

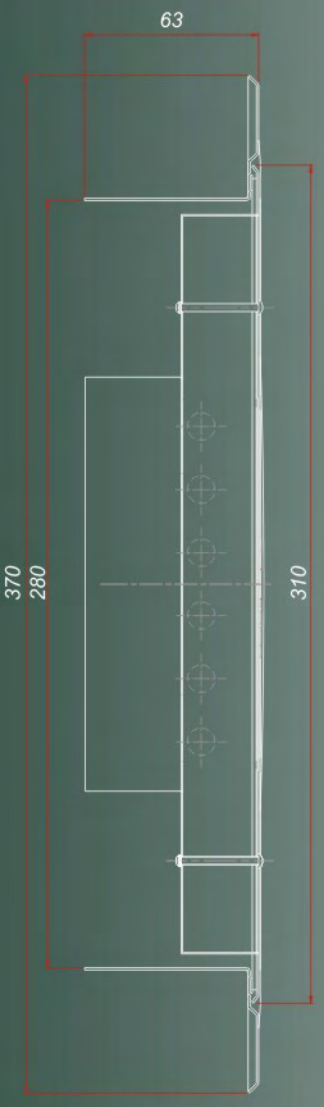

CHIMNEY DOORS

CHIMNEY DOORS 110x150

zinc

white plastic

brown plastic

CHIMNEY DOORS

anko

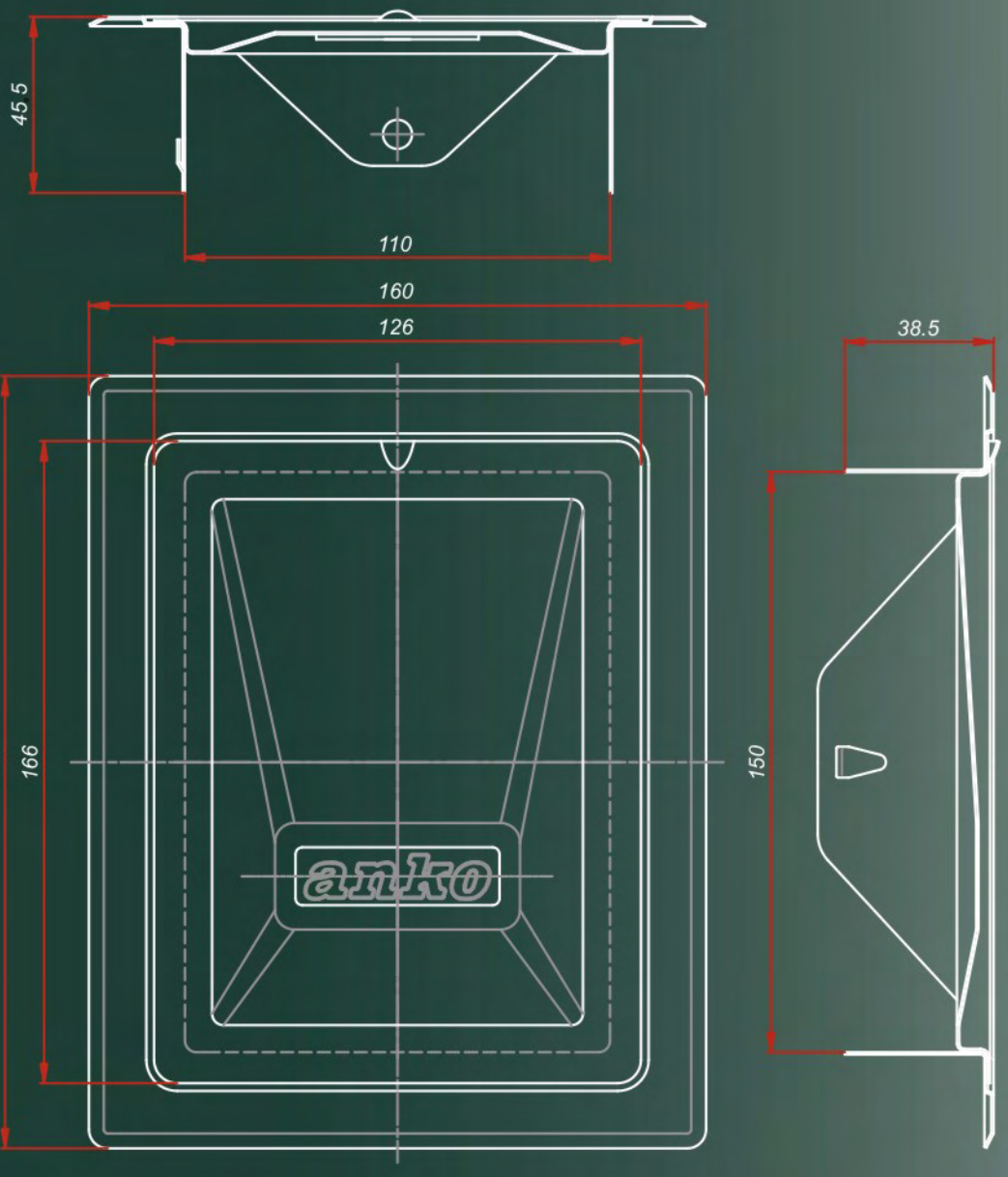
45 5
110
160
126
38.5
200
166
150
anko

VENTILATION GRIDS, INSERTED

C.3

since 1959.

antic kosta

Used for aeration of rooms with possibility for regulation of air flow, as well as it's directioning.

Resistance to corrosion is provided by surface coating gained by zinc or by plastification.

Fitting-in of the grid is simple, and also taking-down and cleaning of the safety net is easy and quick.

VENTILATION GRIDS, INSERTED

qualityaustria SYSTEM CERTIFIED ISO 9001:2008 No. 06085/0
CERTIFIED IQNet MANAGEMENT SYSTEM

VENTILATION WALL OUTLET COVER Ø118

plastic

C.3.1
C.3.2
C.3.3

zinc

zinc

C.3.13
C.3.14
C.3.15

plastic

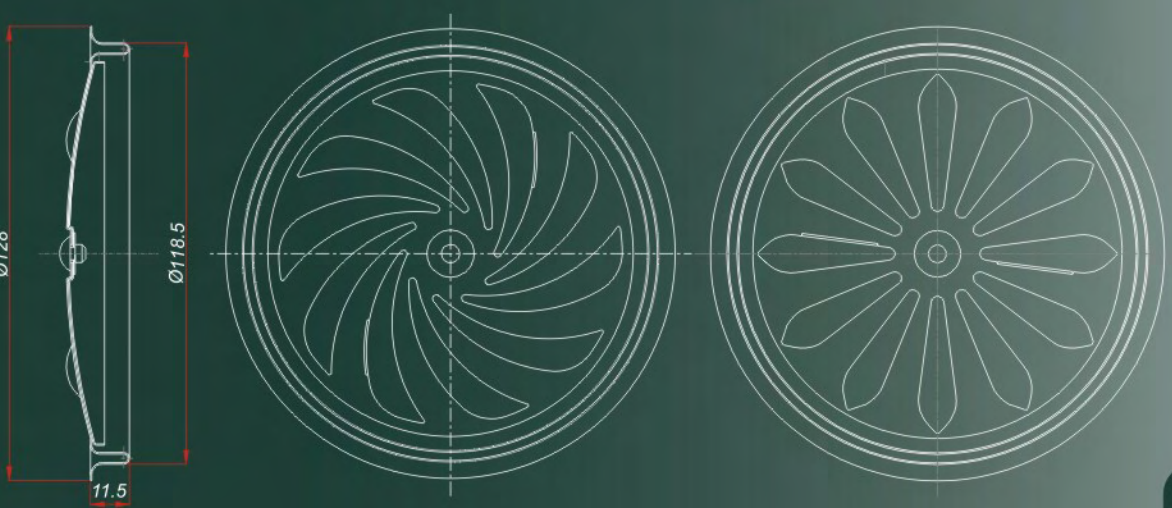

VENTILATION GRIDS, INSERTED

VENTILATION GRID WITH INSERTER

zinc

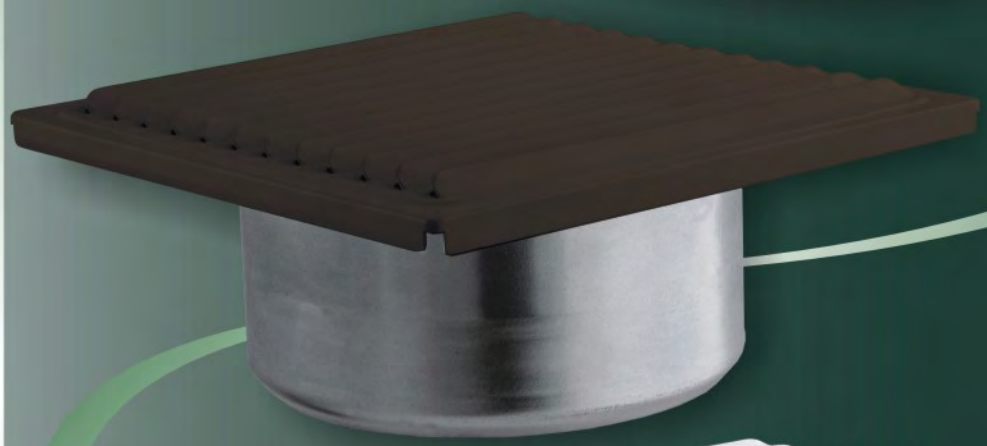

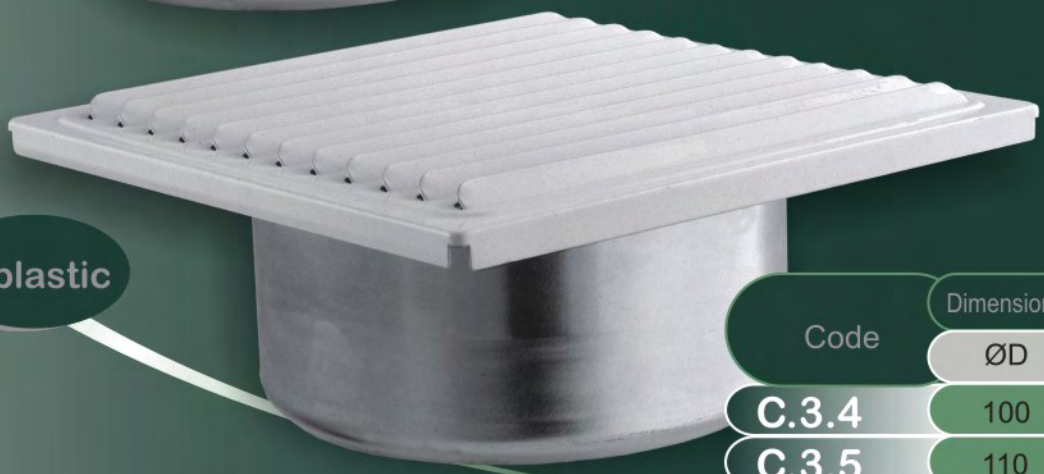

plastic

Code	Dimensions ØD
C.3.4	100
C.3.5	110
C.3.6	125

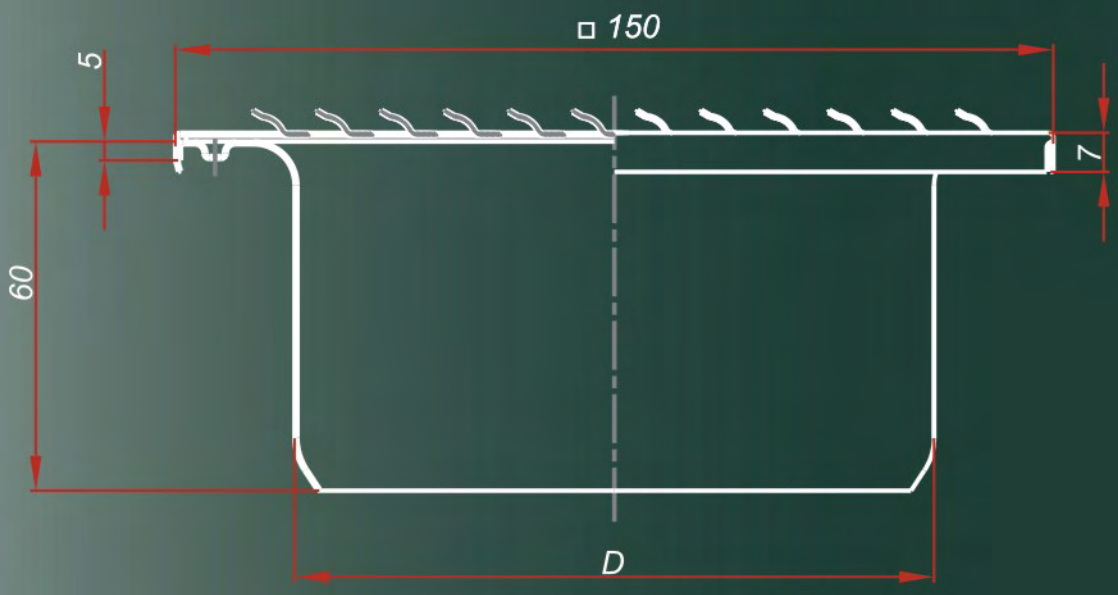

VENTILATION GRIDS, INSERTED

VENTILATION GRID WITH DEFLECTOR C.3.7

zinc

plastic

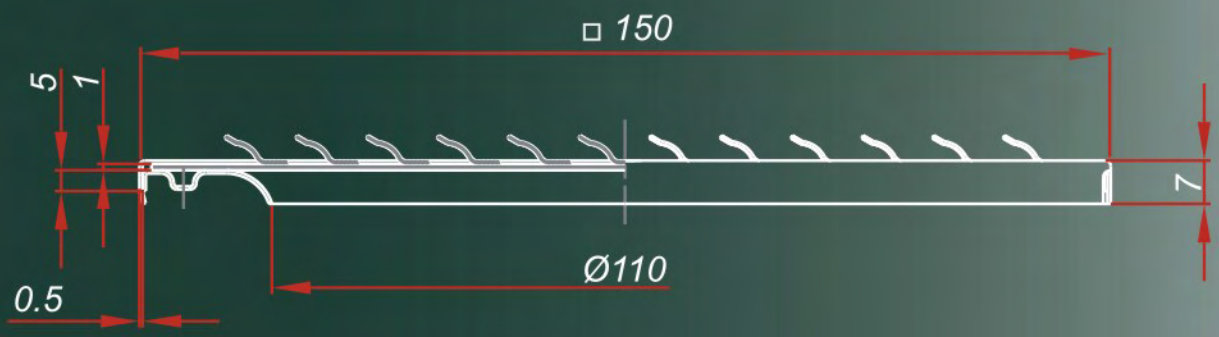

VENTILATION GRIDS, INSERTED

quality austria
SYSTEM CERTIFIED
ISO 9001:2008 No. 05080/0
CERTIFIED IQNet MANAGEMENT SYSTEM

GRAVITATION VENTILATION GRID 150x150

zinc

brown plastic

ZINC INSERTER AND DEFLECTOR

C.3.8	150x150/Ø100	GRID (white, brown, zinc)
C.3.9	150x150/Ø110	GRID (white, brown, zinc)
C.3.10	150x150/Ø125	GRID (white, brown, zinc)
C.3.11	150x150 with deflector	GRID (white, brown, zinc)

inox

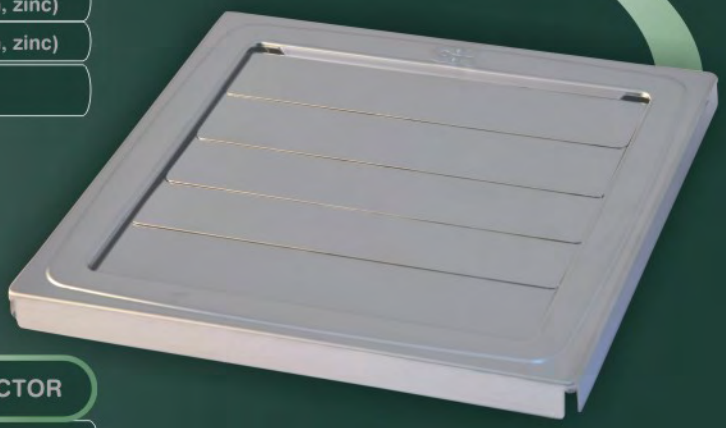

PLASTIFICATED INSERTER AND DEFLECTOR

IN.3.7	150x150/Ø100	GRID (INOX)
IN.3.8	150x150/Ø110	GRID (INOX)
IN.3.9	150x150/Ø125	GRID (INOX)
IN.3.10	150x150 with deflector	GRID (INOX)

ZINC INSERTER AND DEFLECTOR

IN.3.11	150x150/Ø100	GRID (INOX)
IN.3.12	150x150/Ø110	GRID (INOX)
IN.3.13	150x150/Ø125	GRID (INOX)
IN.3.14	150x150 with deflector	GRID (INOX)

VENTILATION GRIDS, INSERTED

qualityaustria SYSTEM CERTIFIED ISO 9001:2008 No. 06085/0
CERTIFIED IQNet MANAGEMENT SYSTEM

GRAVITATION VENTILATION GRID 150x150

white plastic

Gravitaciona rešetka 150x150 sa usmerivačem

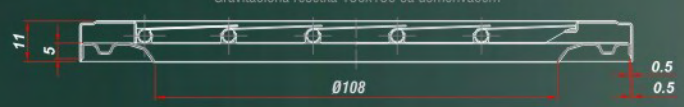

Gravitaciona rešetka 150x150 sa uvodnikom

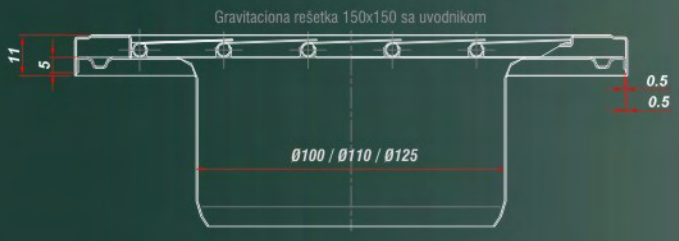

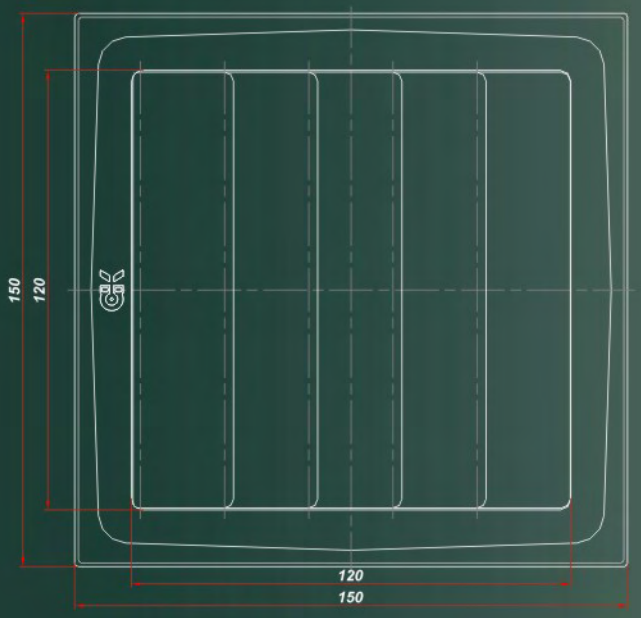

VENTILATION GRIDS, INSERTED

qualityaustria SYSTEM CERTIFIED ISO 9001:2008 No. 06086/0
CERTIFIED IQNet MANAGEMENT SYSTEM

GRAVITATION VENTILATION GRID 200x200

VENTILATION GRIDS, INSERTED

brown plastic

zinc

C.3.12

white plastic

inox

VENTILATION GRDIS, INSERTED

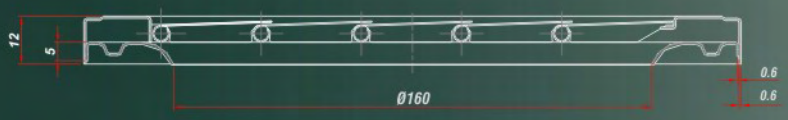

C.3.12

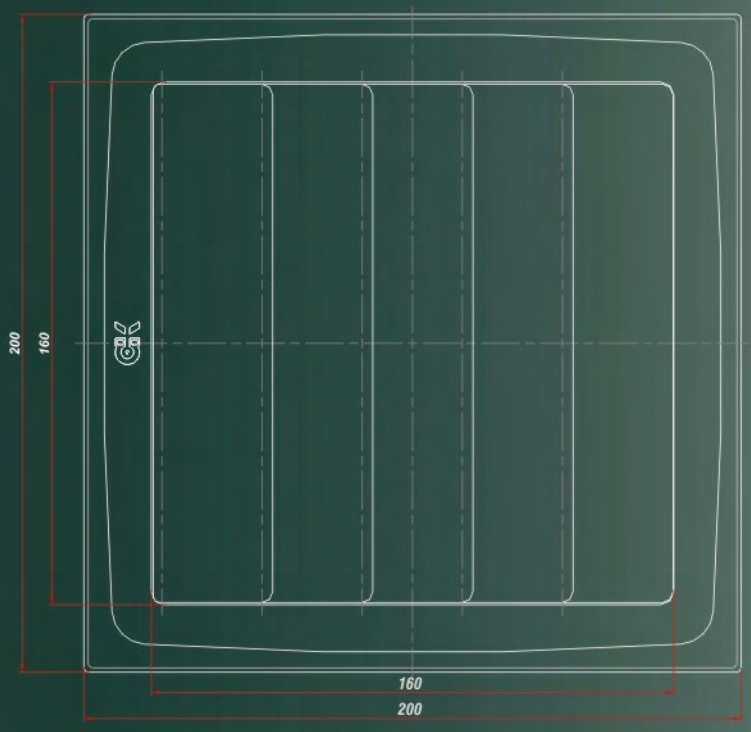

SLIDING GRID WITH HELICAL OPENING 125x215

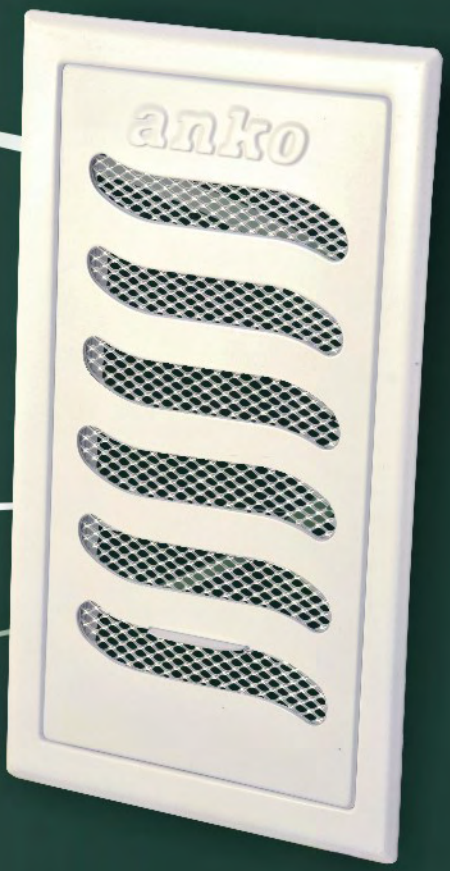

white plastic

brown plastic

zinc

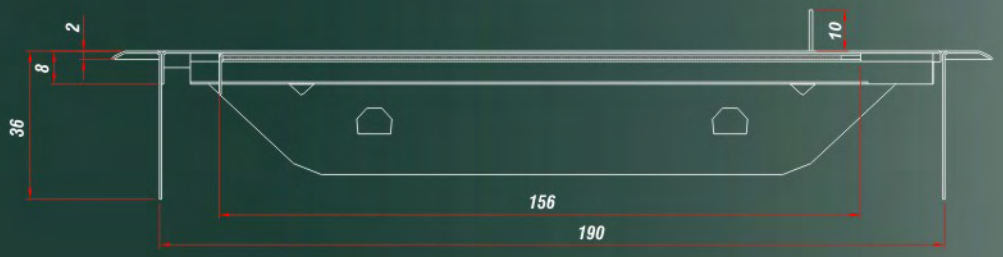

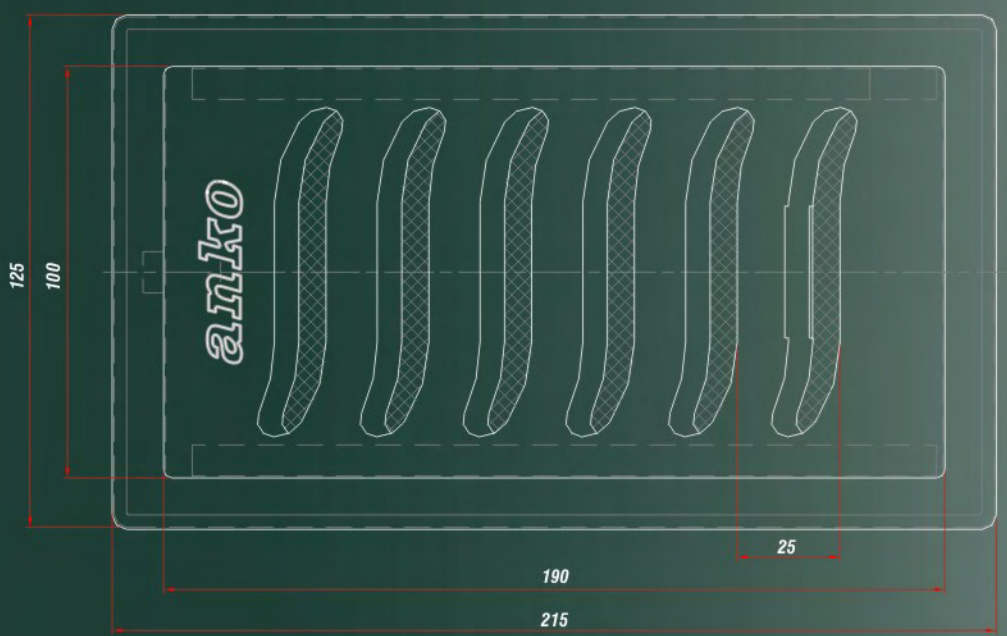

VENTILATION GRIDS, INSERTED

EXPANSION ROSETTES

since 1959.

antic kosta

C.4.1

C.4.2

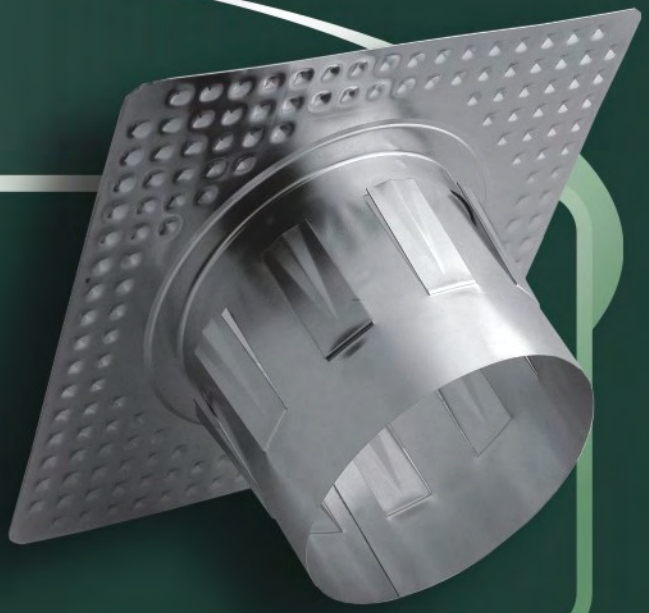

Expansion rosette is made of quality metal sheet, surface is protected by zinc procedure.

Designing solution provides safety ventilation of isolation on inner chimney pipe and simple fitting-in.

Production program has rosettes for chimney of Ø200mm and Ø160mm.

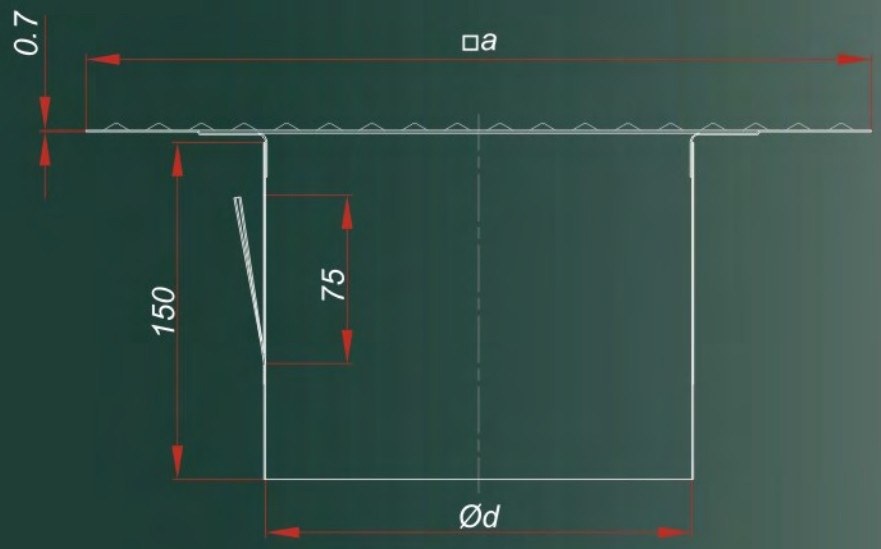

Code	Dimensions	
	Ød	□a
C.4.1	190	350
C.4.2	150	304

FLOOR GRIDS

IN.1

since 1959.

antic kosta

Floor grid is made of quality, corossion resistant steel plates and resistant to chemical means.

It consists of the frame and grid, and it is simple to take-down and clean, as well as a very good permeability of liquid waste.

Production program has floor grids with dimensions 100x100mm, 120x120mm, 150x150mm and 200x200mm.

FLOOR GRID 100x100

IN.1.1

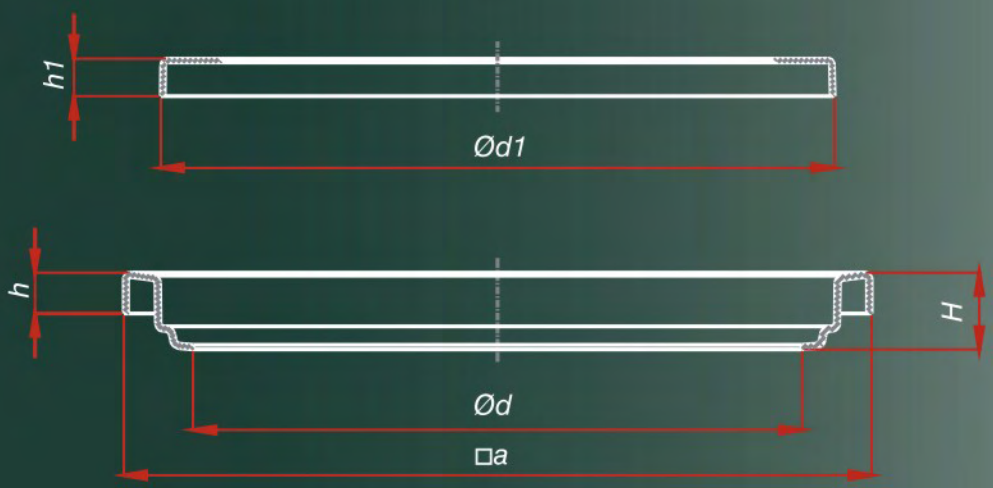

Code **IN.1.1**

Dimensions (mm)

a	d	H	h	d_1	h_1
100	80.5	11	6	90.5	5

FLOOR GRIDS 150x150

IN.1.3

IN.1.2

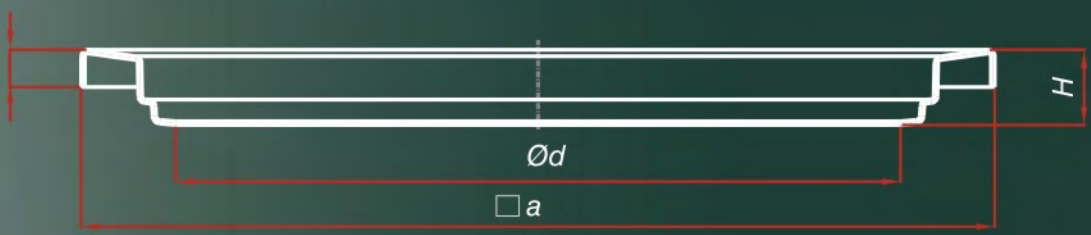

Code	Dimensions (mm)					
	a	d	H	h	d_1	h_1
IN.1.2	150	122	8	6	130	5.5
IN.1.3	150	122	8	6	130	4
IN.1.4	150	83	8	6	95	3

FLOOR GRIDS 200x200

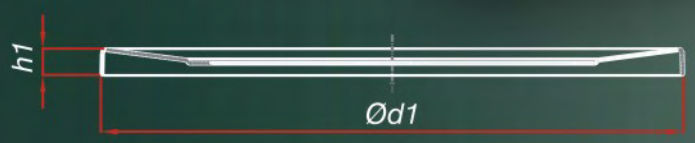

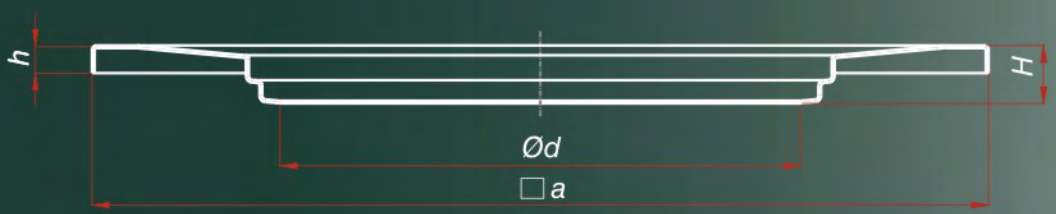

Code	Dimensions (mm)					
	a	d	H	h	d_1	h_1
IN.1.5	200	119	13	6.5	130	5.5
IN.1.6	200	119	13	6.5	130	4
IN.1.7	200	83	13	6.5	95	3
IN.1.8	200	147	13	6.5	160	6

FLOOR GRID 120x120/95

IN.1.9

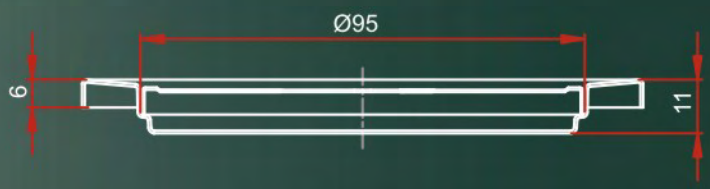

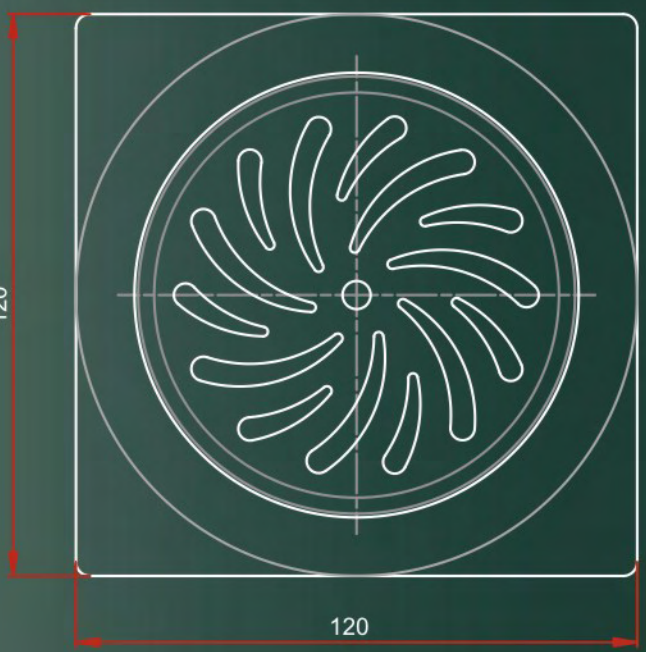

FLOOR GRID, sealing type 120x120/95

IN.1.10

Floor grid 120x120/95 with possibility to close the opening

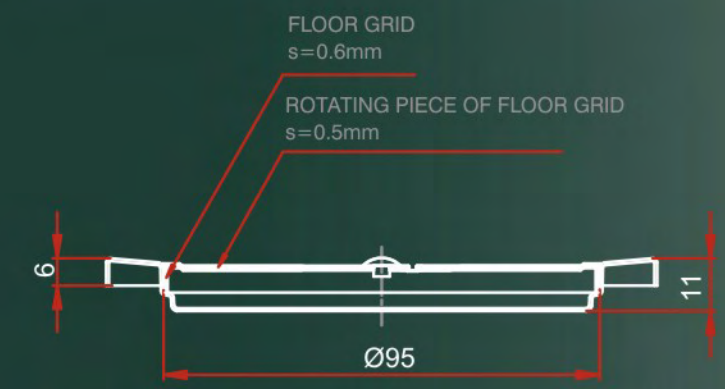

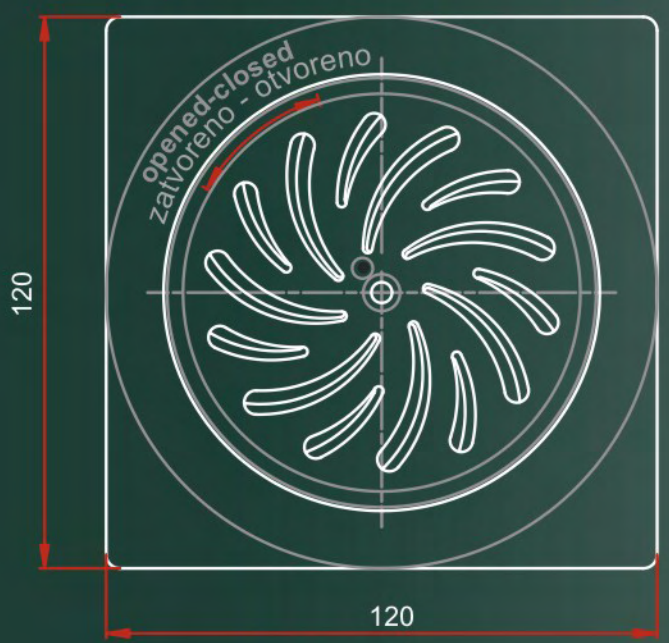

FLOOR GRID, sealing type 150x150/130

IN.1.11

FLOOR GRIDS

Floor grid 150x150/130 with possibility to close the opening

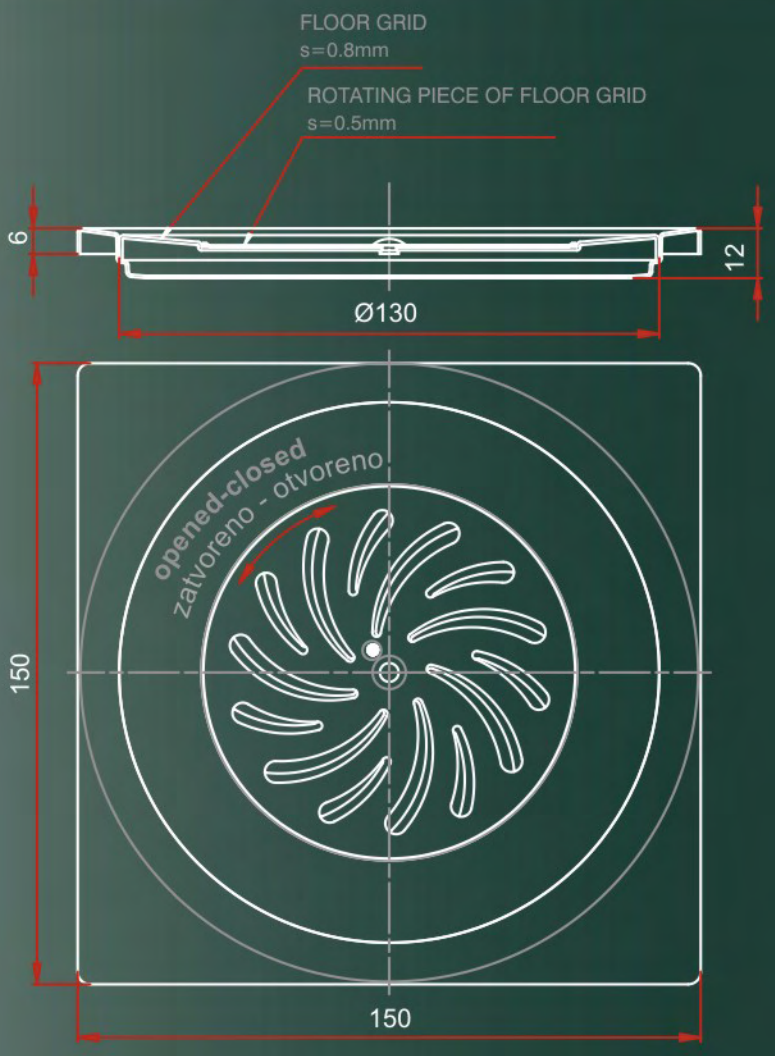

SIPHONS

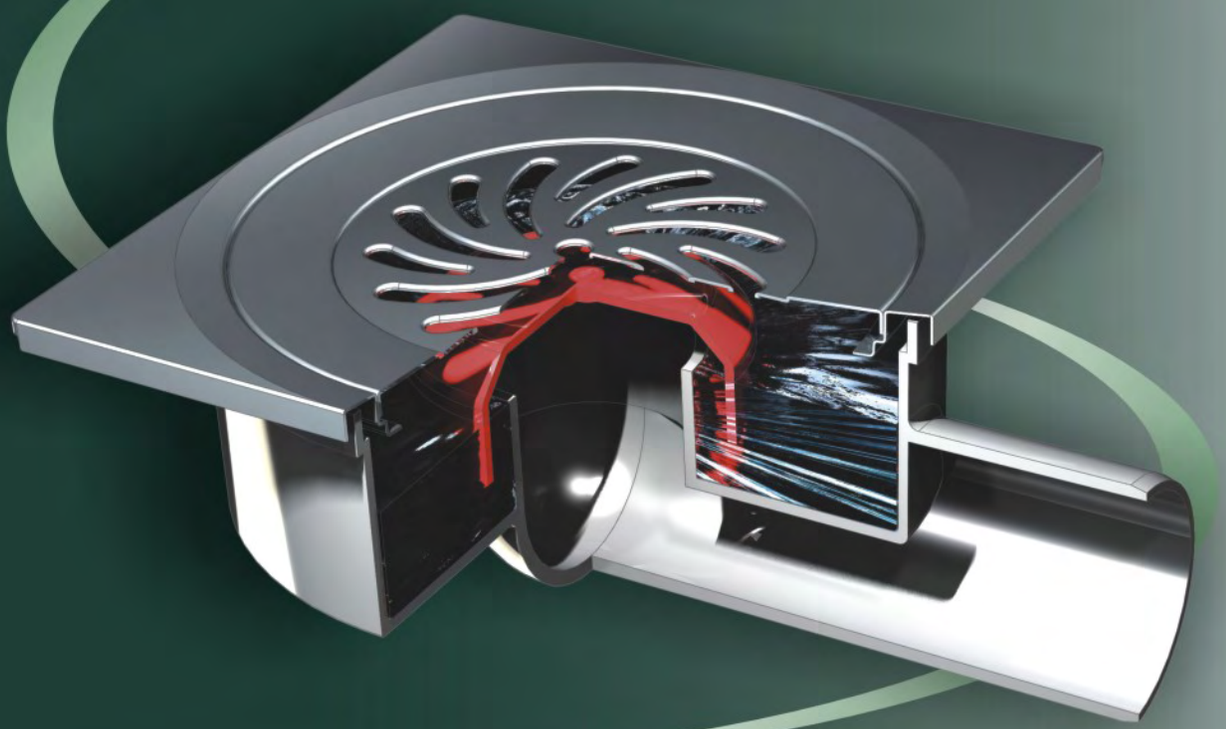

Siphon is beside grid, constituent part of the drainage and it's basic function is that, by system of siphoning, privents the flow of unpleasant smells from sewerage system; and also to keep bigger pieces of filth in siphon's vessel. In siphon's vessel a large quantity of liquid is stored and that anables drainage, which could lead to loss of it's basic function. Cleaning procedure of the vessel is quite simple.

They are produced on machines for injection pressing of plastomer and they are intended for standard sewerage pipes, diameter Ø50mm.
Siphons can be devided into 2 groups: with vertical and with horizontal outlets. They can be fitted-in to "thin" floors.

All floor grids from our production program is compatibile with siphons (except floor grid IN.1.1. and IN.1.8).

SIPHON S130 with vertical outlet Ø50

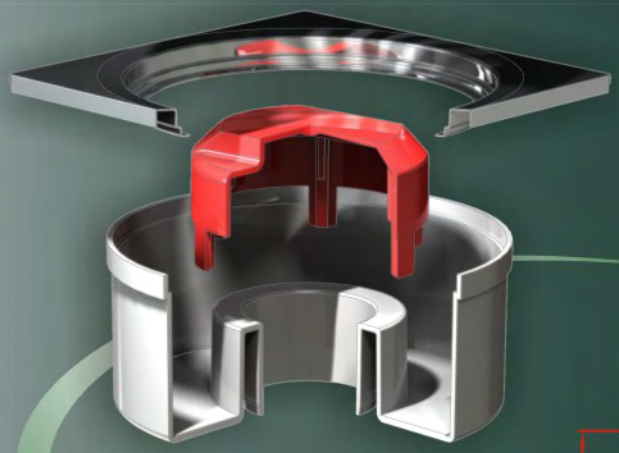

S.1

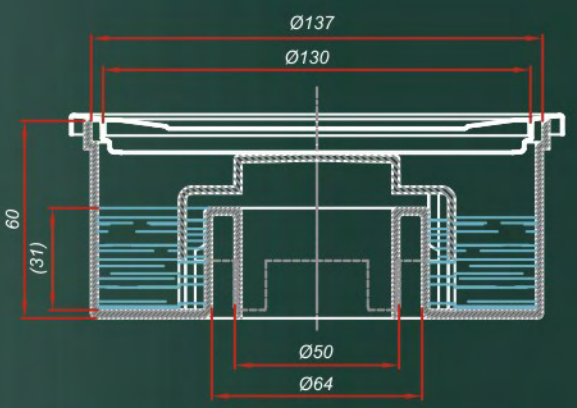

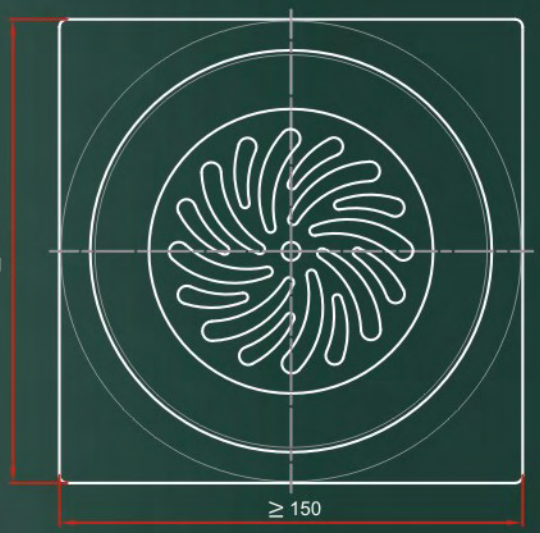

Floor grids

IN. 1.2 | IN.1.3 | IN.1.4 | IN.1.5 | IN.1.6 | IN.1.7 | IN.1.11

SIPHON S130 with horizontal outlet Ø50

S.2

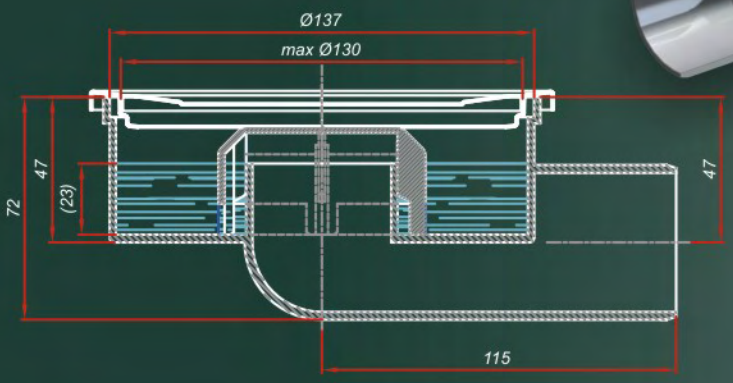

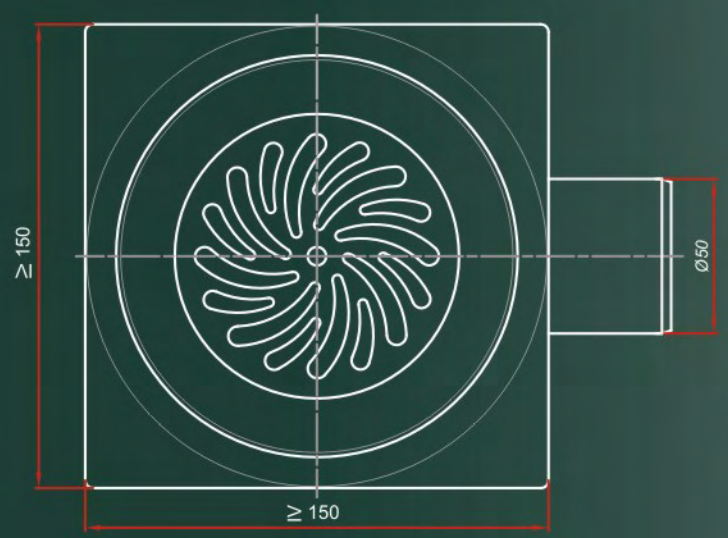

Floor grids

IN. 1.2 IN.1.3
IN.1.4 IN.1.5
IN.1.6 IN.1.7 IN.1.11

SIPHONS

SIPHON S95 with vertical outlet Ø50

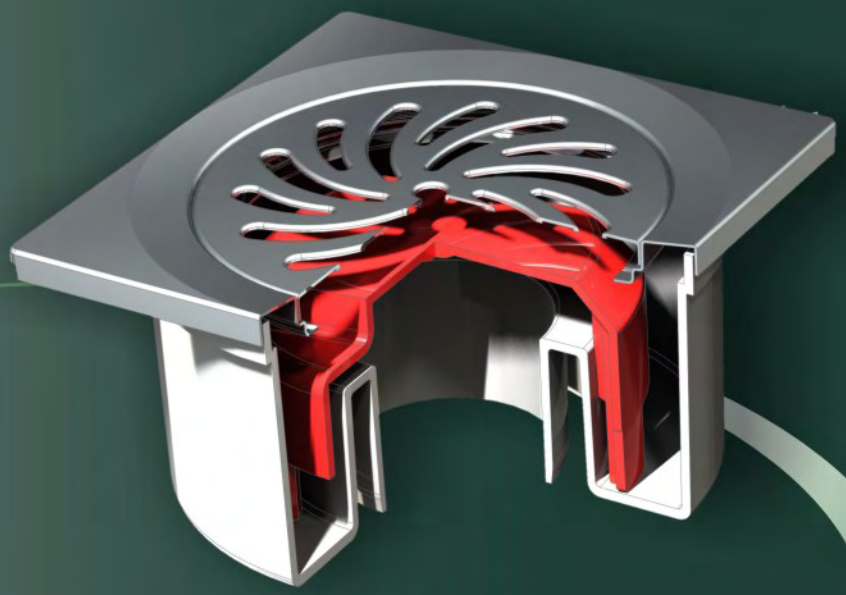

S.3

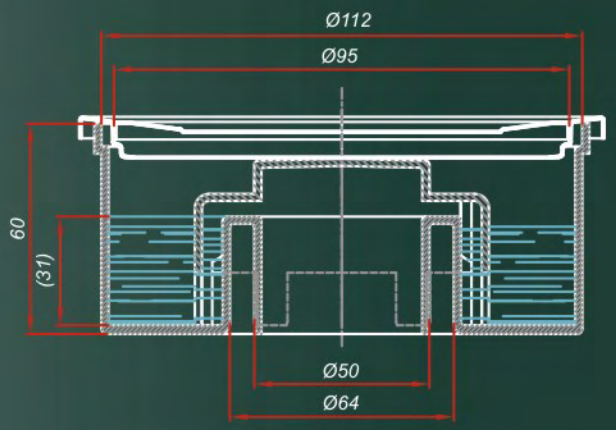

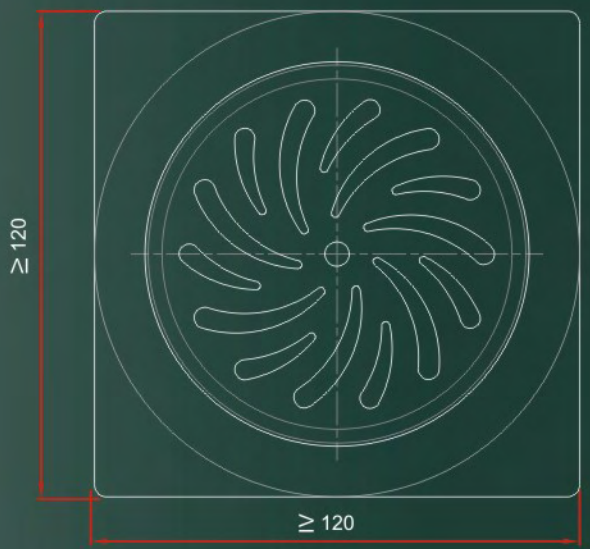

Floor grids

IN. 1.4 | IN.1.7

IN.1.9 | IN.1.10

SIPHONS

SIPHON S95 with horizontal outlet Ø50

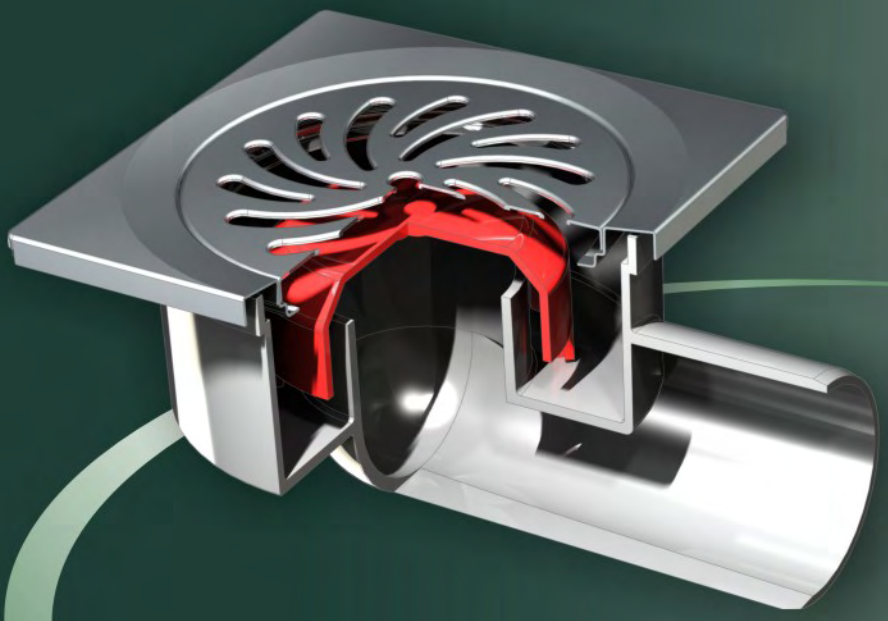

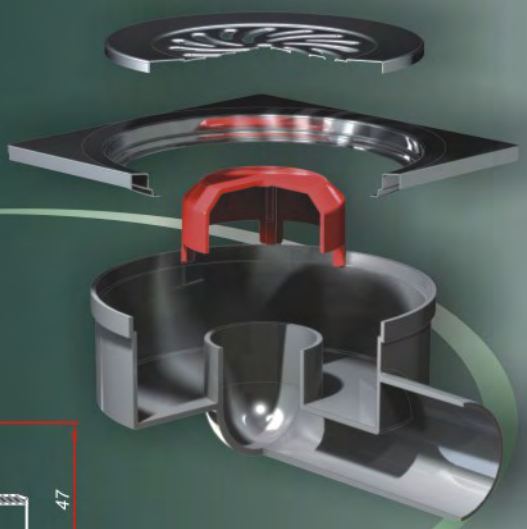

S.4

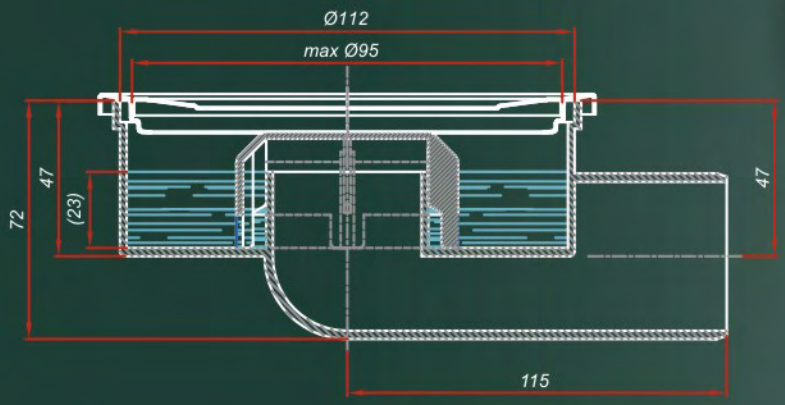

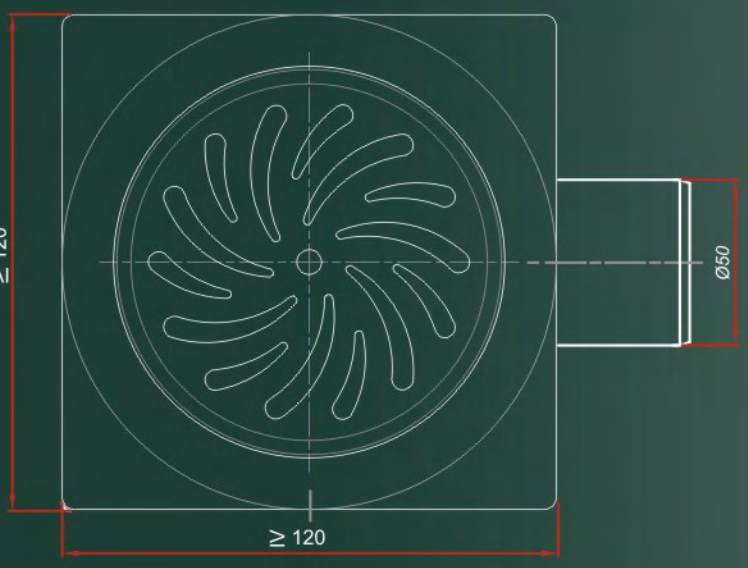

SIPHONS

Floor grids

IN. 1.4 | IN.1.7

IN.1.9 | IN.1.10

BATHTUB DOORS

IN.2

since 1959.

antic kosta

Bathtub doors consists of frame and the cover and they are completely made of high quality, corossion resistant steel plates and resistant to chemical means.

By designing solution, it is provided easy opening and fitting-in of the cover, and sealing prevents the entrance of unpleasant smells into the room.

Production program includes a very large range of dimensions, adjusted to the dimensions of tiles which can be found in the market.

qualityaustria SYSTEM CERTIFIED ISO 9001:2008 No. 06085/0

CERTIFIED IQNet MANAGEMENT SYSTEM

IN.2.1

IN.2.2

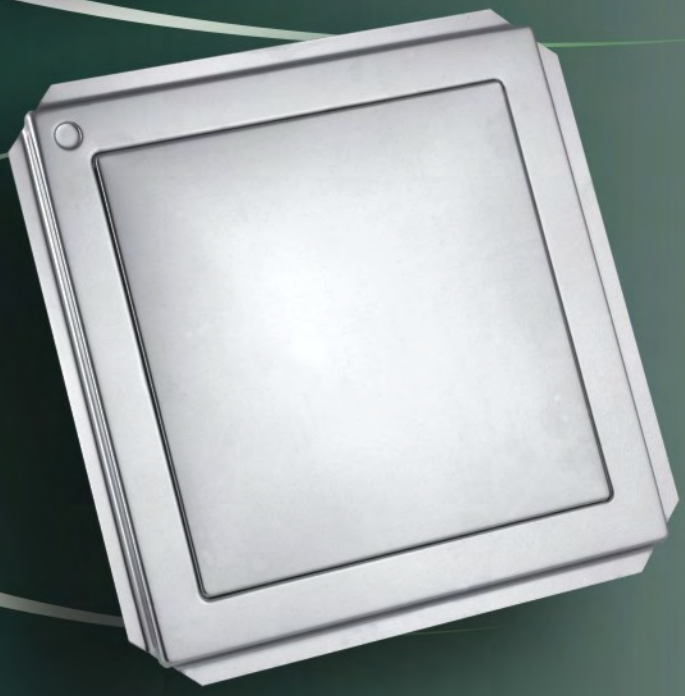

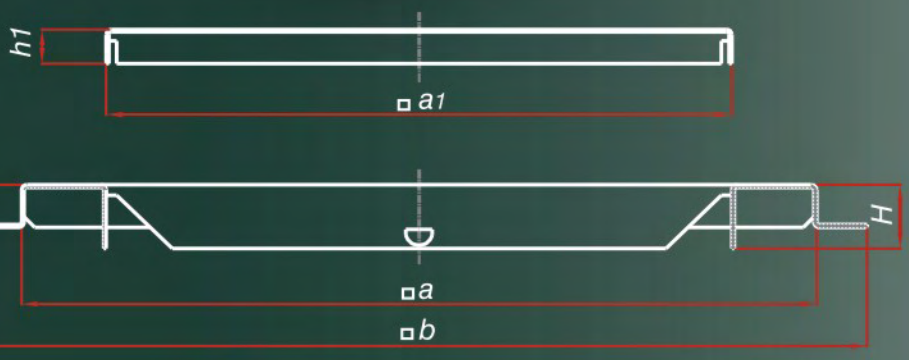

Code	Dimensions (mm)					
	a	b	H	h	a_1	h_1
IN.2.1	150	170	11	10	120	6.5
IN.2.2	200	220	12	10	161	5

BATHTUB DOORS

IN.2.3

IN.2.4

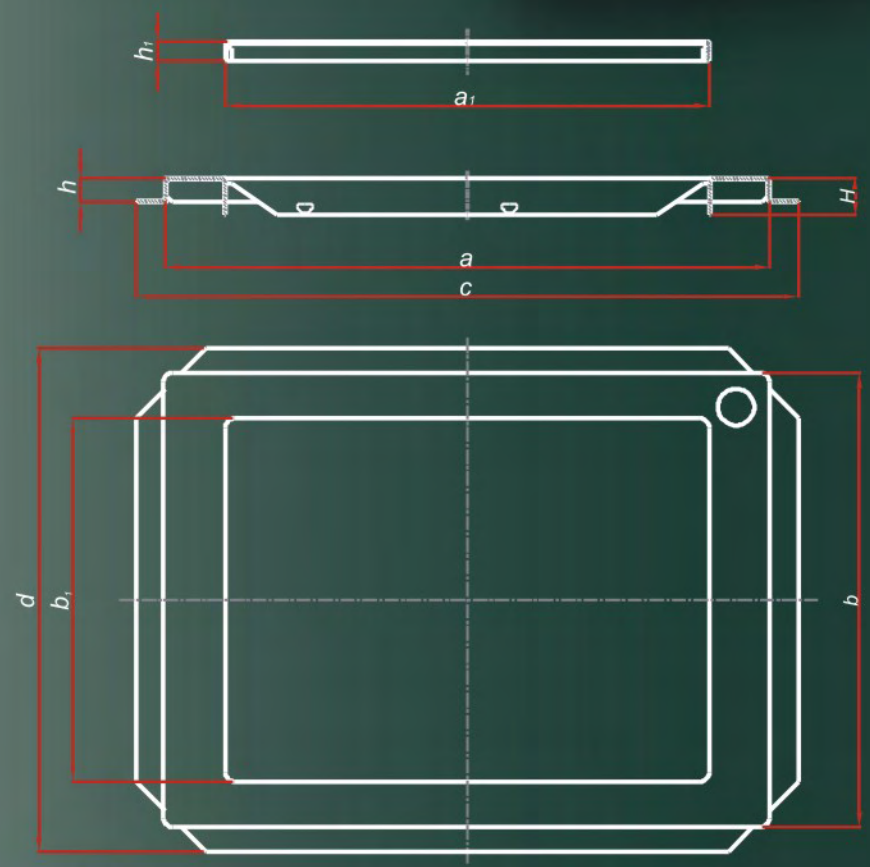

Code	Dimensions (mm)								
	a	b	c	d	H	a_1	b_1	h_1	h
IN.2.3	200	150	217	167	11	160	120	6	10
IN.2.4	250	200	265	220	11.5	200	160	6.5	10
IN.2.5	300	200	321	221	16	230	130	6	10

qualityaustria SYSTEM CERTIFIED ISO 9001:2008 No. 06085/0
CERTIFIED IQNet MANAGEMENT SYSTEM

IN.2.5

IN.2.6

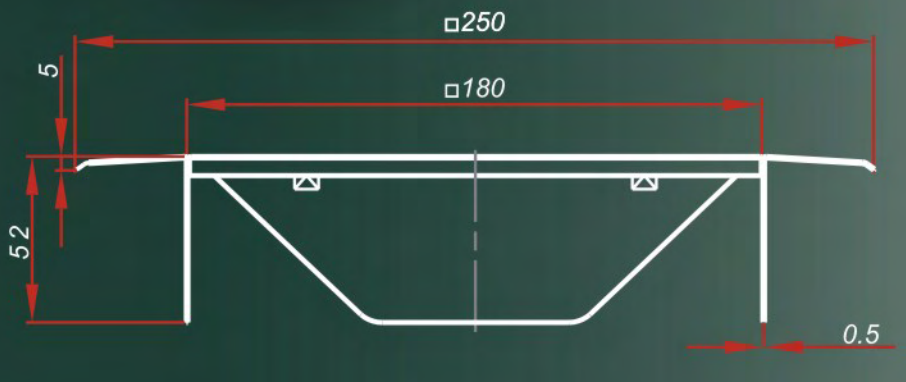

VENTILATION GRIDS, COROSSION RESISTANT

IN.3

since 1959.

antic kosta

Ventilation grids are used for aeration of rooms trough the wall openings.

They are made of the most quality corossion resistant steel plates, which provides to the grid, also, good resistance to other etching means.

System of rotating/sliding grid enables a simple adjustment of air flow. By their shape and size, these grids meet the most various demands of the market.

quality austria SYSTEM CERTIFIED ISO 9001:2008 No. 06/0865/01

CERTIFIED IQNet MANAGEMENT SYSTEM

SLIDING GRID 125x215

VENTILATION GRIDS, COROSSION RESISTANT

IN.3.1

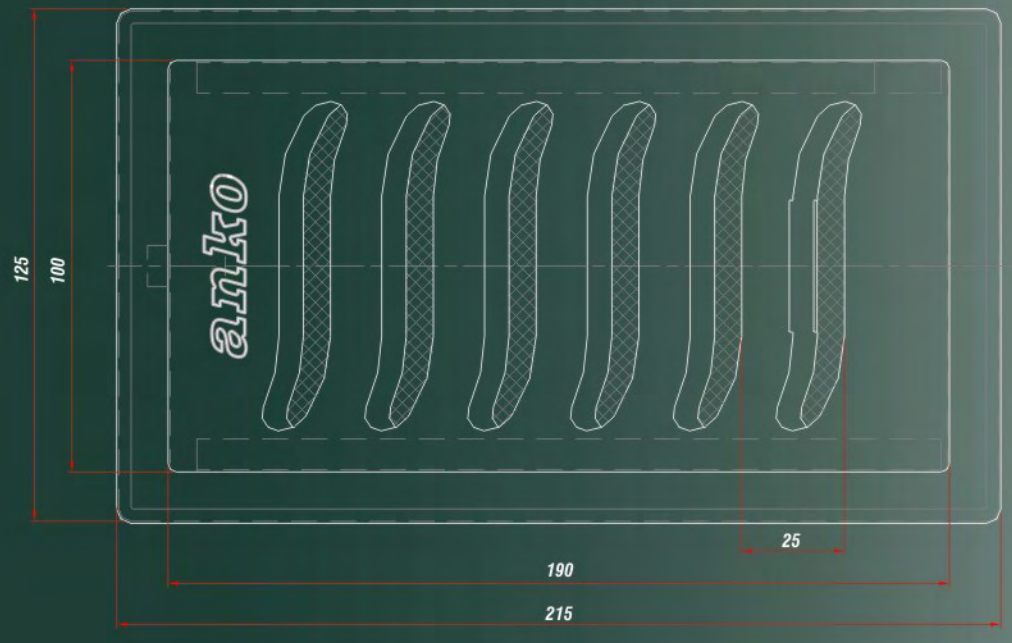

VENTILATION GRID, CIRCULAR 150x150

VENTILATION GRIDS, COROSSION RESISTANT

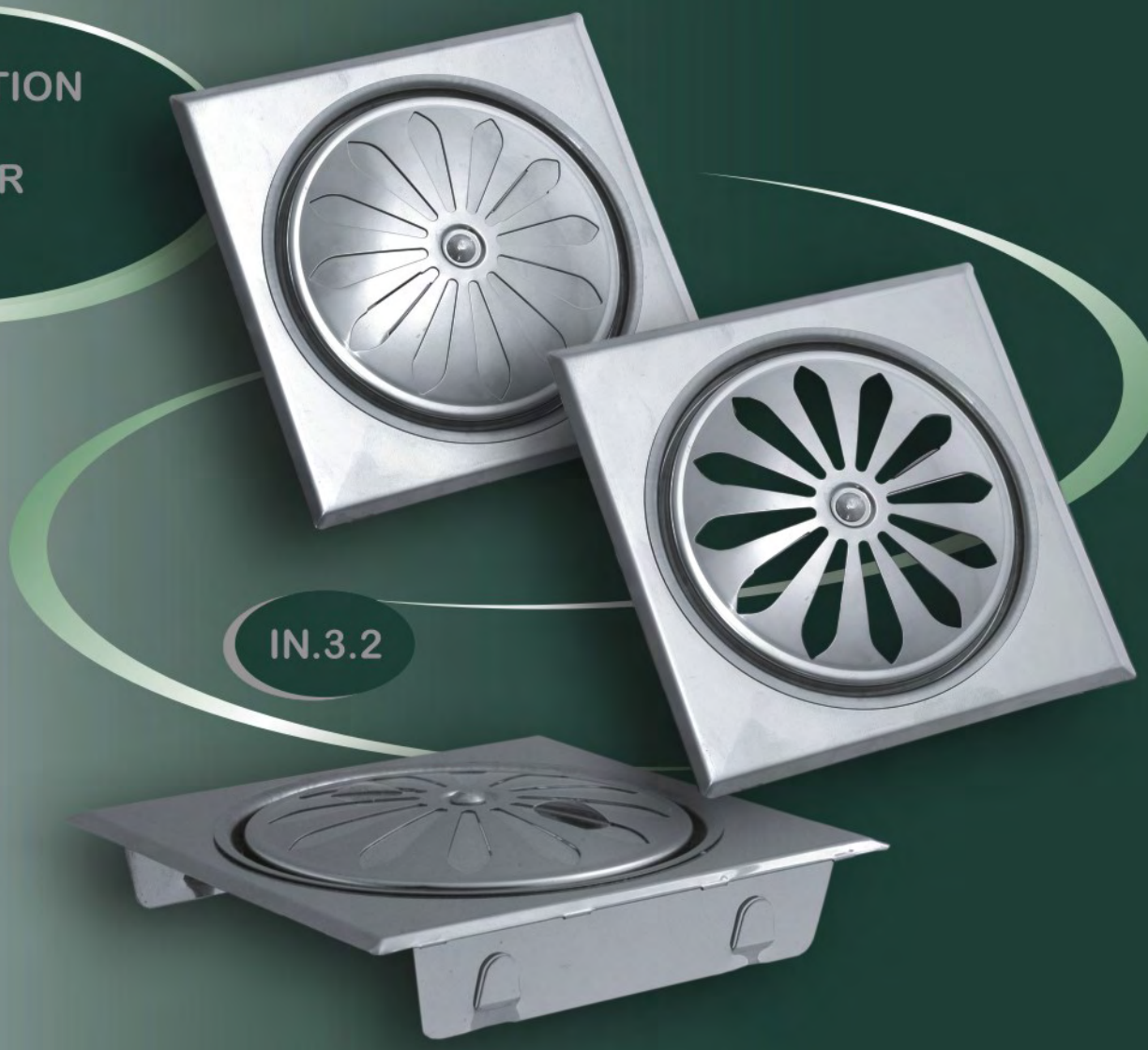

IN.3.2

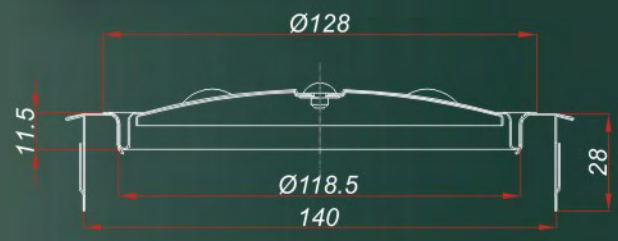

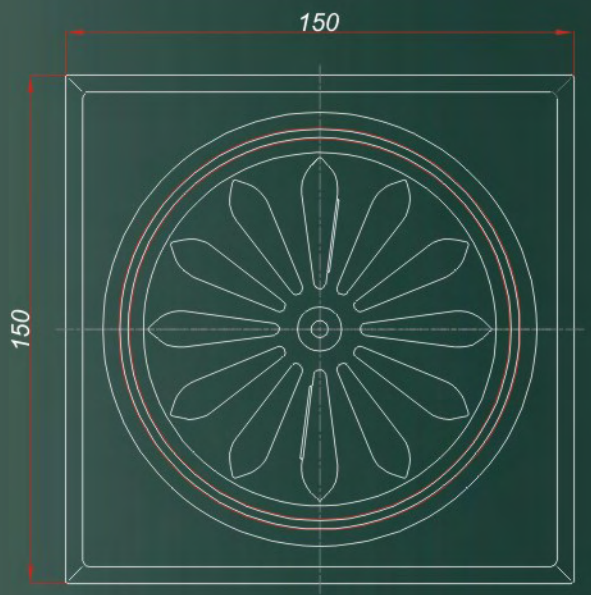

VENTILATION GRID, SQUARE 150x150

VENTILATION GRIDS, COROSSION RESISTANT

IN.3.3

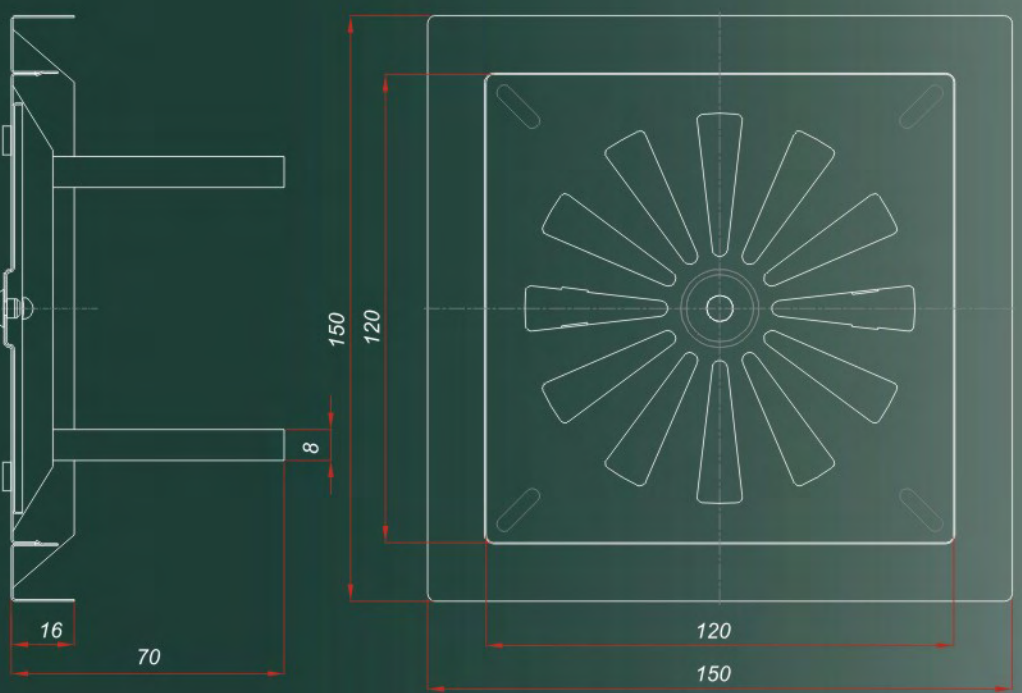

VENTILATION GRID, DUAL, CIRCULAR 150x290

VENTILATION GRIDS, COROSSION RESISTANT

IN.3.4

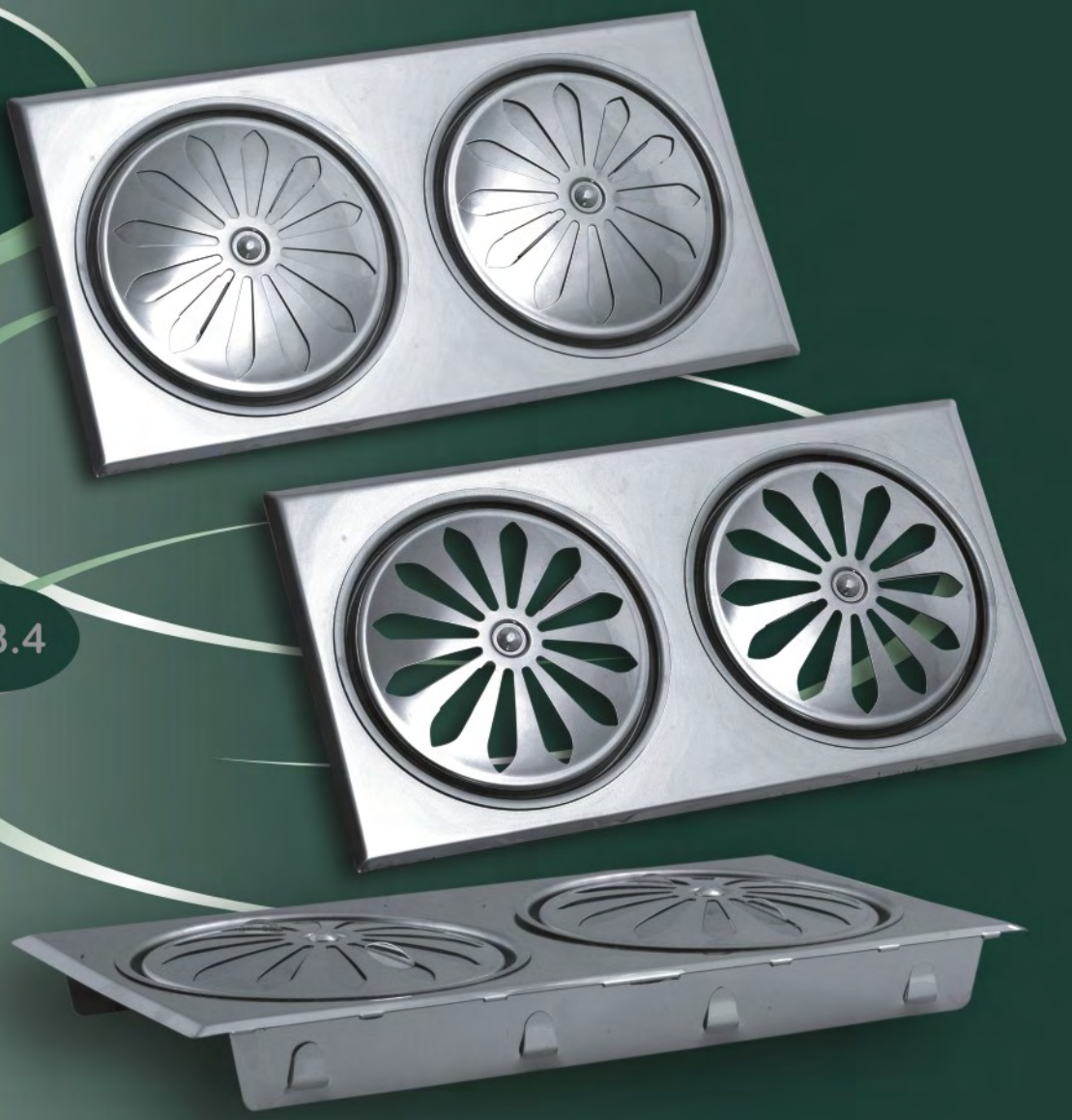

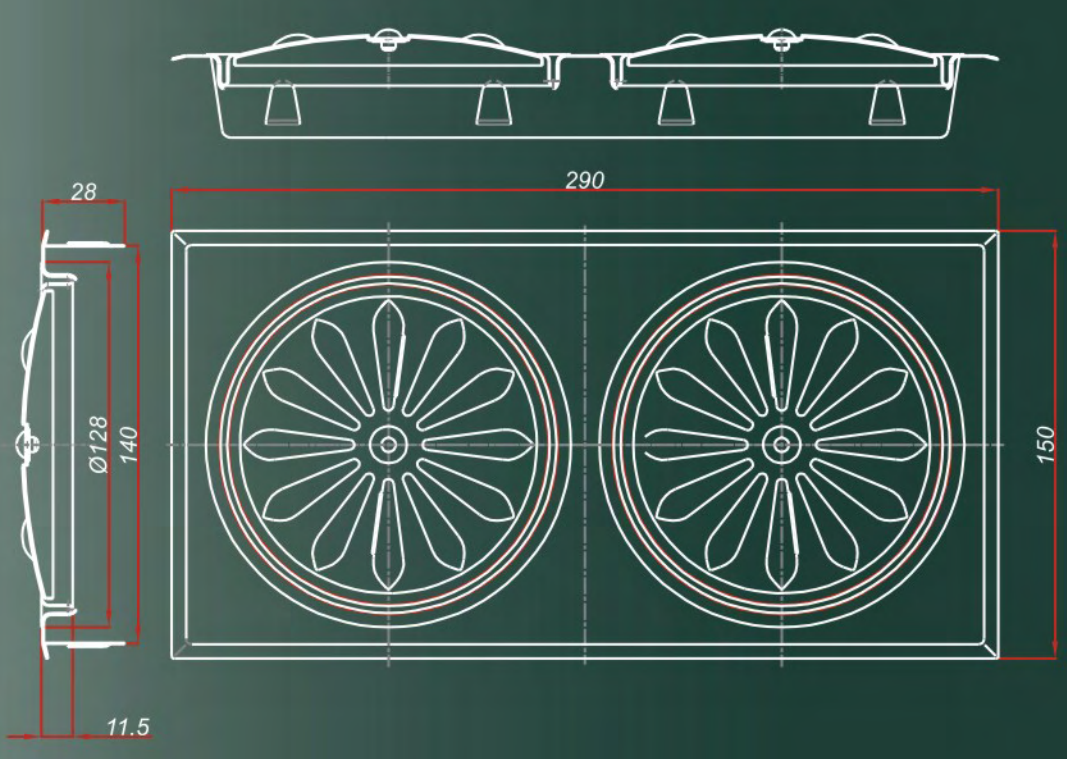

VENTILATION GRID, RECTANGULAR 130x240

IN.3.5

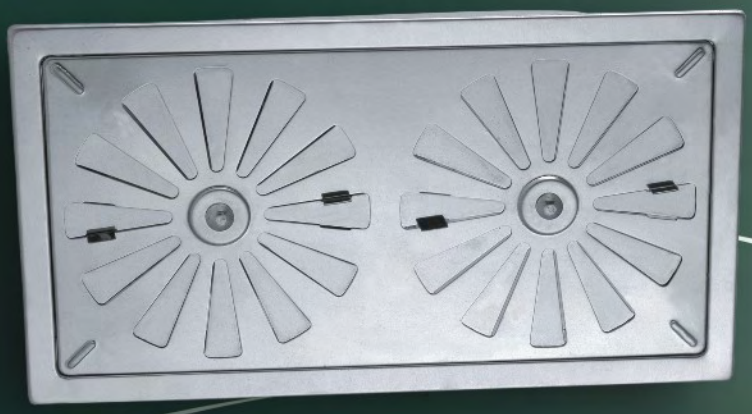

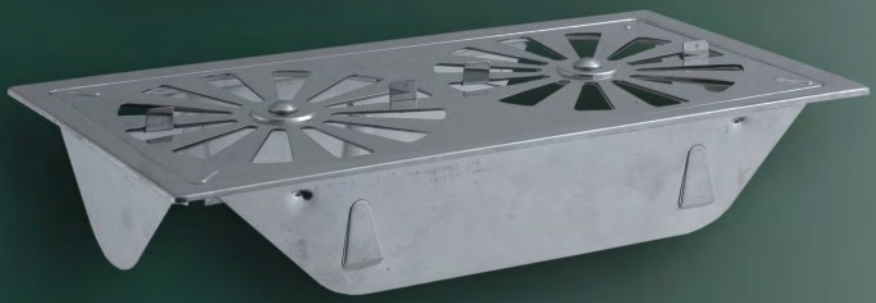

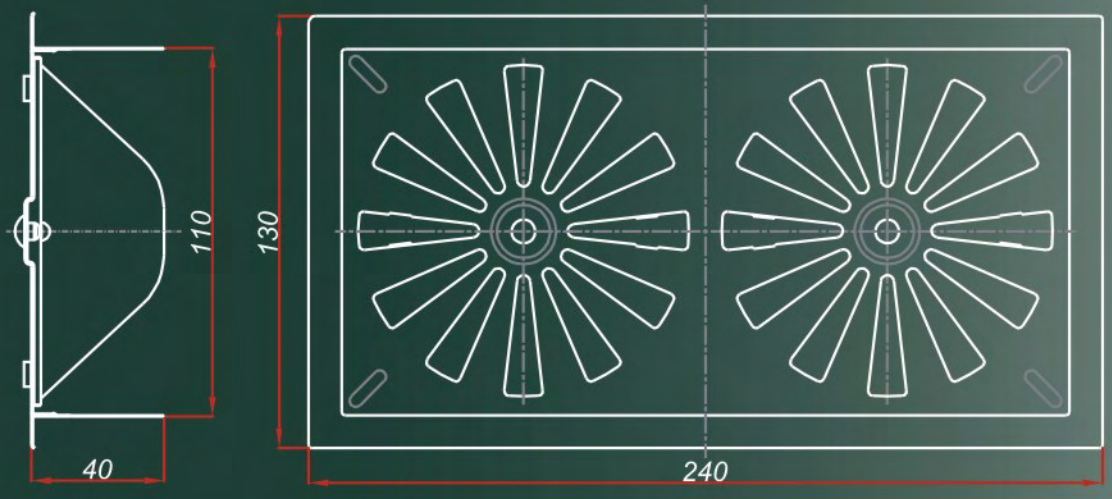

VENTILATION GRIDS, COROSSION RESISTANT

NOMENCLATURE OF PRODUCTS

since 1959.

antic kosta

PRODUCTS

- **AL** Aluminium
  - **AL.1** Aluminium wall ventilation grids
  - **AL.2** Aluminium ceiling ventilation grids
- **C** Black sheet metal
  - **C.1** Wall outlet covers
  - **C.2** Chimney doors
  - **C.3** Ventilation grids, inserted
  - **C.4** Expansion rosettes
- **IN** Inox
  - **IN.1** Floor grids
  - **IN.2** Bathtub doors
  - **IN.3** Ventilation grids, corossion resistant steel plates

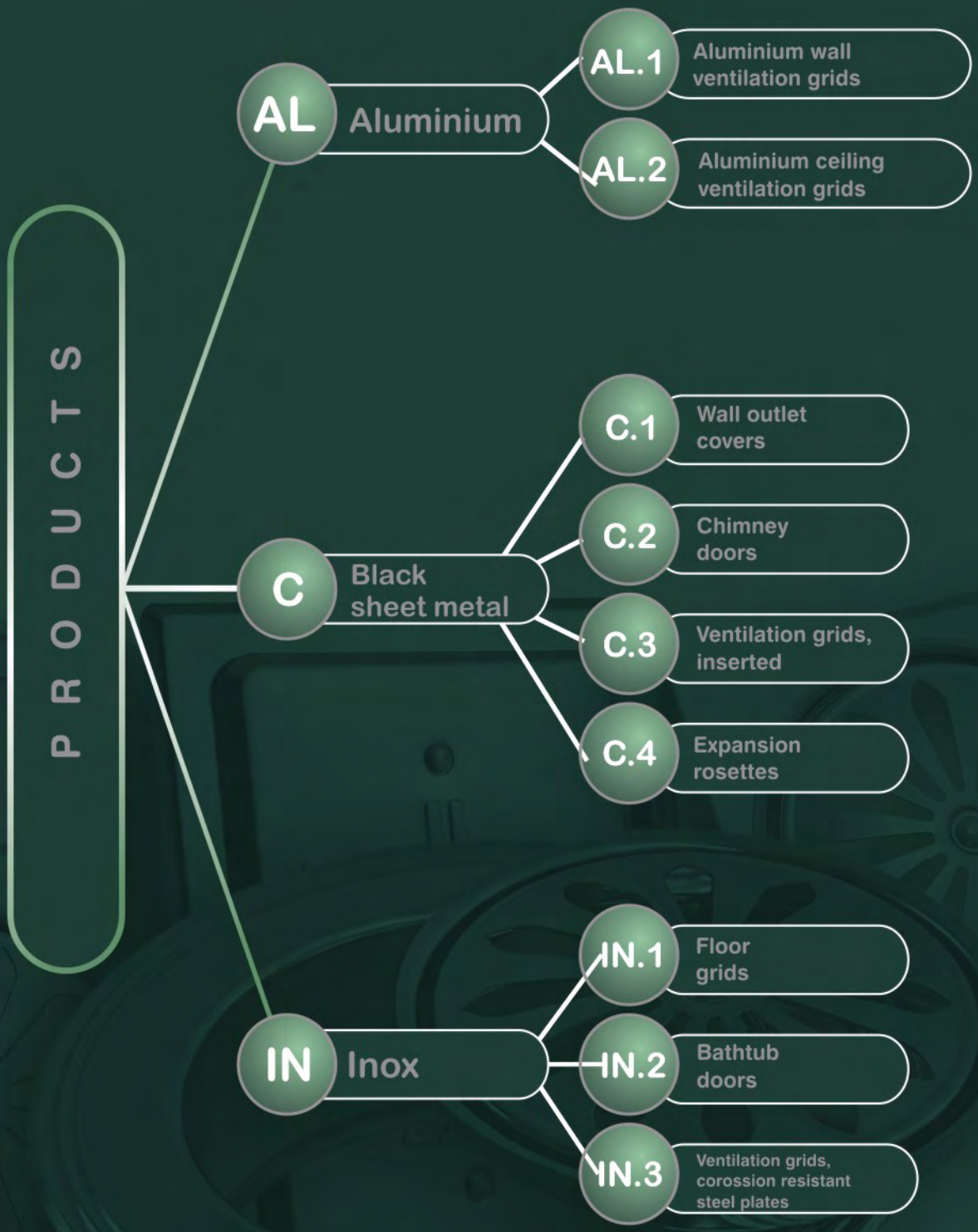

Materials:
AL - aluminium
C - carbon steel
IN - corossion resistant steel

Surface protection:
zinc - galvanized
plast - plastificated

qualityaustria SYSTEM CERTIFIED ISO 9001:2008 No. 05086/0
CERTIFIED IQNet MANAGEMENT SYSTEM

NOMENCLATURE OF PRODUCTS

AL.1 Aluminium wall ventilation grids

- **AL.1.ZR** Aluminium wall ventilation grids without flow regulator

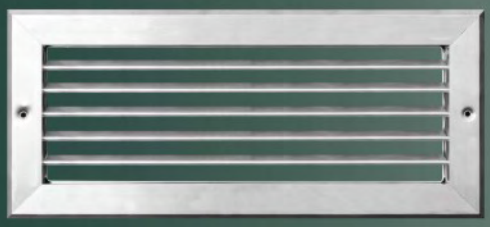

- **AL.1.ZR-PR** Aluminimum wall ventilation grids with flow regulator

AL.2 Aluminium ceiling ventilation grids

- **AL.2.PR** Aluminium ceiling ventilation grids without flow regulator

- **AL.1.PR-RP** Aluminimum ceiling ventilation grids with flow regulator

C.1 Wall outlet covers

C.1.110	Wall outlet cover Ø110x55
C.1.118K-PS	Wall outlet cover Ø118x55 with spherical cover
C.1.118K-PR	Wall outlet cover Ø118x55 with flat cover
C.1.118S-PS	Wall outlet cover Ø118x60 with spherical cover
C.1.118S-PR	Wall outlet cover Ø118x60 with flat cover
C.1.118D-PS	Wall outlet cover Ø118x80 with spherical cover
C.1.118D-PR	Wall outlet cover Ø118x80 with flat cover
C.1.130	Wall outlet cover Ø130
C.1.145	Wall outlet cover Ø145
C.1.150	Wall outlet cover Ø150
C.1.160	Wall outlet cover Ø160
C.1.180	Wall outlet cover Ø180
C.1.200	Wall outlet cover Ø200
C.1.85	Gas wall outlet cover Ø85
C.1.85R-P	Reducer Ø85

C.2 Chimney doors

- C.2.1 Chimney door 120x180
- C.2.2 Chimney door 160x280
- C.2.3 Chimney door 130x260, ravna
- C.2.4 Chimney door 120x180, flat
- C.2.5 Chimney door 120x180-ak
- C.2.6 Chimney door 160x280-ak
- C.2.7 Chimney door 110x150

NOMENCLATURE OF PRODUCTS

C.3 Ventilation grids, inserted

- C.3.1 Ventilation wall outlet cover Ø118x55-ak
- C.3.2 Ventilation wall outlet cover Ø118x60-ak
- C.3.3 Ventilation wall outlet cover Ø118x80-ak
- C.3.4 Ventilation grid with inserter 150x150/100
- C.3.5 Ventilation grid with inserter 150x150/110
- C.3.6 Ventilation grid with inserter 150x150/125
- C.3.7 Ventilation grid with deflector 150x150
- C.3.8 Gravitation ventilation grid with inserter 150x150/Ø100
- C.3.9 Gravitation ventilation grid with inserter 150x150/Ø110
- C.3.10 Gravitation ventilation grid with inserter 150x150/Ø125
- C.3.11 Gravitation ventilation grid with deflector 150x150
- C.3.12 Gravitation ventilation grid 200x200
- C.3.13 Ventilation wall outlet grid Ø118x55
- C.3.14 Ventilation wall outlet grid Ø118x60
- C.3.15 Ventilation wall outlet grid Ø118x80
- C.3.16 Sliding grid 125x215

qualityaustria SYSTEM CERTIFIED ISO 9001:2008 No. 06085/0
CERTIFIED IQNet MANAGEMENT SYSTEM

NOMENCLATURE OF PRODUCTS

C.4 Dilatation rosette

- C.4.1 Dilatation rosette 350x350/200
- C.4.2 Dilatation rosette 304x304/160

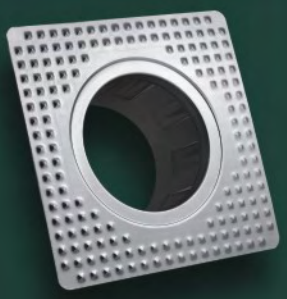

IN.1 Floor grids

- IN.1.1 Floor grid, spiral 100x100/90
- IN.1.2 Floor grid, spiral 150x150/130
- IN.1.3 Floor grid, trapezoidal 150x150/130
- IN.1.4 Floor grid, trapezoidal 150x150/95
- IN.1.5 Floor grid, spiral 200x200/130
- IN.1.6 Floor grid, trapezoidal 200x200/130
- IN.1.7 Floor grid, trapezoidal 200x200/95
- IN.1.8 Floor grid, spiral 200x200/160
- IN.1.9 Floor grid 120x120/95
- IN.1.10 Floor grid 120x120/95, sealing
- IN.1.11 Floor grid 150x150/130, sealing

NOMENCLATURE OF PRODUCTS

IN.2 Bathtub doors

- IN.2.1 Bathtub doors 150x150
- IN.2.2 Bathtub doors 200x200
- IN.2.3 Bathtub doors 150x200
- IN.2.4 Bathtub doors 200x250
- IN.2.5 Bathtub doors 200x300
- IN.2.6 Bathtub doors 250x250

IN.3 Ventilation grids, corossion resistant plates

- IN.3.1 Ventilation grid 125x215
- IN.3.2 Ventilation grid, circular 150x150
- IN.3.3 Ventilation grid, square 150x150
- IN.3.4 Ventilation grid, dual, circular 150x290
- IN.3.5 Ventilation grid, rectangular 150x290
- IN.3.7 Gravitation ventilation grid 150x150/100
- IN.3.8 Gravitation ventilation grid 150x150/110
- IN.3.9 Gravitation ventilation grid 150x150/125
- IN.3.10 Gravitation ventilation grid with deflector150x150

corossion resistant steel grid+ plastificated inserter

- IN.3.11 Gravitation grid 150x150/100
- IN.3.12 Gravitation grid 150x150/110
- IN.3.13 Gravitation grid 150x150/125
- IN.3.14 Gravitation grid with deflector 150x150

corossion resistant steel grid+ galvanized inserter

qualityaustria SYSTEM CERTIFIED ISO 9001:2008 No. 06085/0
CERTIFIED IQNet MANAGEMENT SYSTEM

gegründet 1959

antic kosta

Das Unternehmen „Antić Kosta“ d.o.o. arbeitet seit 2007 im Rahmen des ISO 9001:2008 Qualitätssicherungssystems und die Unterlagenkontrolle wird von der Zertifizierungsgesellschaft „ Quality Austria“ geführt.

Um die Platzierung der Produkte zu ermöglichen und die Marktnachfrage der EU zu befriedigen sind die Unterlagen über die Übereinstimmung der Produkte gemäß der Europäische Gebäuderichtlinie „EN89/106“ – CE Markierung gefertigt worden.

CE 11

IQNet

THE INTERNATIONAL CERTIFICATION NETWORK

CERTIFICATE

IQNet and Quality Austria

hereby certify that the organization

ANTIC KOSTA d.o.o.
Serbia -37212 Stalac, V.J. 66
for following field of activities
Manufacturing of metal products
for civil engineering
EAC: 17.2

has implemented and maintains a

QUALITY MANAGEMENT SYSTEM

which fulfills the requirements of the following standard

ISO 9001:2008

Issued on:	2010-06-24
Validity date:	2013-06-25
Quality Austria certified since:	2007-06-26

Registration Number: AT-06086/0

Signatures removed for security reasons

IQNet — *Michael Drechsel, President of IQNet*

Mag. Friedrich Khuen-Belasi, Authorised Representative of Quality Austria — qualityaustria Succeed with Quality

IQNet Partners*:
AENOR *Spain* AFNOR Certification *France* AIB-Vincotte International *Belgium* ANCE *Mexico* APCER *Portugal* CISQ *Italy* CQC *China* CQM *China* CQS *Czech Republic* Cro Cert *Croatia* DQS Holding GmbH *Germany* DS *Denmark* ELOT *Greece* FCAV *Brazil* FONDONORMA *Venezuela* HKQAA *Hong Kong China* ICONTEC *Colombia* IMNC *Mexico* Inspecta Certification *Finland* IRAM *Argentina* JQA *Japan* KFQ *Korea* MSZT *Hungary* Nemko AS *Norway* NSAI *Ireland* PCBC *Poland* Quality Austria *Austria* RR *Russia* SII *Israel* SIQ *Slovenia* SIRIM QAS International *Malaysia* SQS *Switzerland* SRAC *Romania* TEST St Petersburg *Russia* TSE *Turkey* YUQS *Serbia*
IQNet is represented in the USA by: AFNOR Certification, CISQ, DQS Holding GmbH and NSAI Inc.
* The list of IQNet partners is valid at the time of issue of this certificate. Updated information is available under www.iqnet-certification.com

qualityaustria
Succeed with Quality

CERTIFICATE

Quality Austria Training, Certification and Evaluation Ltd. awards this Quality Austria Certificate to the following organisation(s):

ANTIC KOSTA d.o.o.
Serbia -37212 Stalac, V.J. 66

Manufacturing of metal products
for civil engineering

The validity of the Quality Austria Certificate will be maintained via annual surveillance audits and one renewal audit after three years.

This Quality Austria Certificate confirms the application and further development of an effective

QUALITY MANAGEMENT SYSTEM
complying with the requirements of standard
ISO 9001:2008

Registration No.: 06086/0
Date of initial issue: 26 June 2007
Valid until: 25 June 2013

Vienna, 24 June 2010

Quality Austria Training,
Certification and Evaluation Ltd.

Signatures removed for security reasons

Konrad Scheiber, General Manager
Ing. Wolfgang Leitner, Specialist representative

Quality Austria Training, Certification and Evaluation Ltd. is accredited according to the Austrian Accreditation Act by the BMWA (Federal Ministry of Economic Affairs and Labour).

Quality Austria is accredited as an organization for environmental verification by the BMLFUW (Federal Ministry of Agriculture, Forestry, Environment and Water Management).

Quality Austria is authorized by the VDA (Association of the Automotive Industry).

For accreditation and registration details please refer to the applicable regulations and decisions published in the Federal Law Gazette or recognition documents.

Quality Austria is the Austrian member of IQNet (International Certification Network).

Doc. No. FO_24_002

0AF3AC81-2D3A-4664-AC13-0DF37438D88C

The current validity of the certificate is documented exclusively on the Internet under http://www.qualityaustria.com/en/cert EAC: 17.2

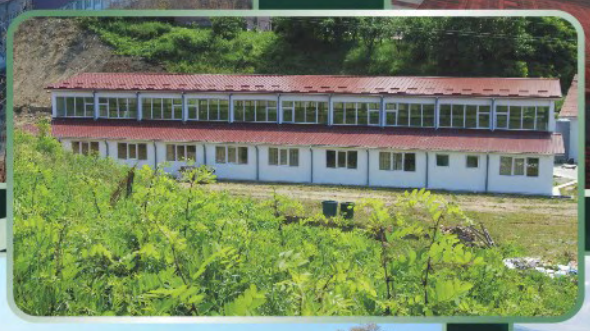

since 1959.

antic kosta

since 1959

antic kosta

The company for production, services and sales
EXPORT - IMPORT

Serbia, 37212 STALAC, V. J. Street no.66
phone/fax: +381 (37) 806-144, 806-488, 806-489
mob.: +381 (63) 620 880
e-mail: ankostalac@ptt.rs

www.antic-kosta.com

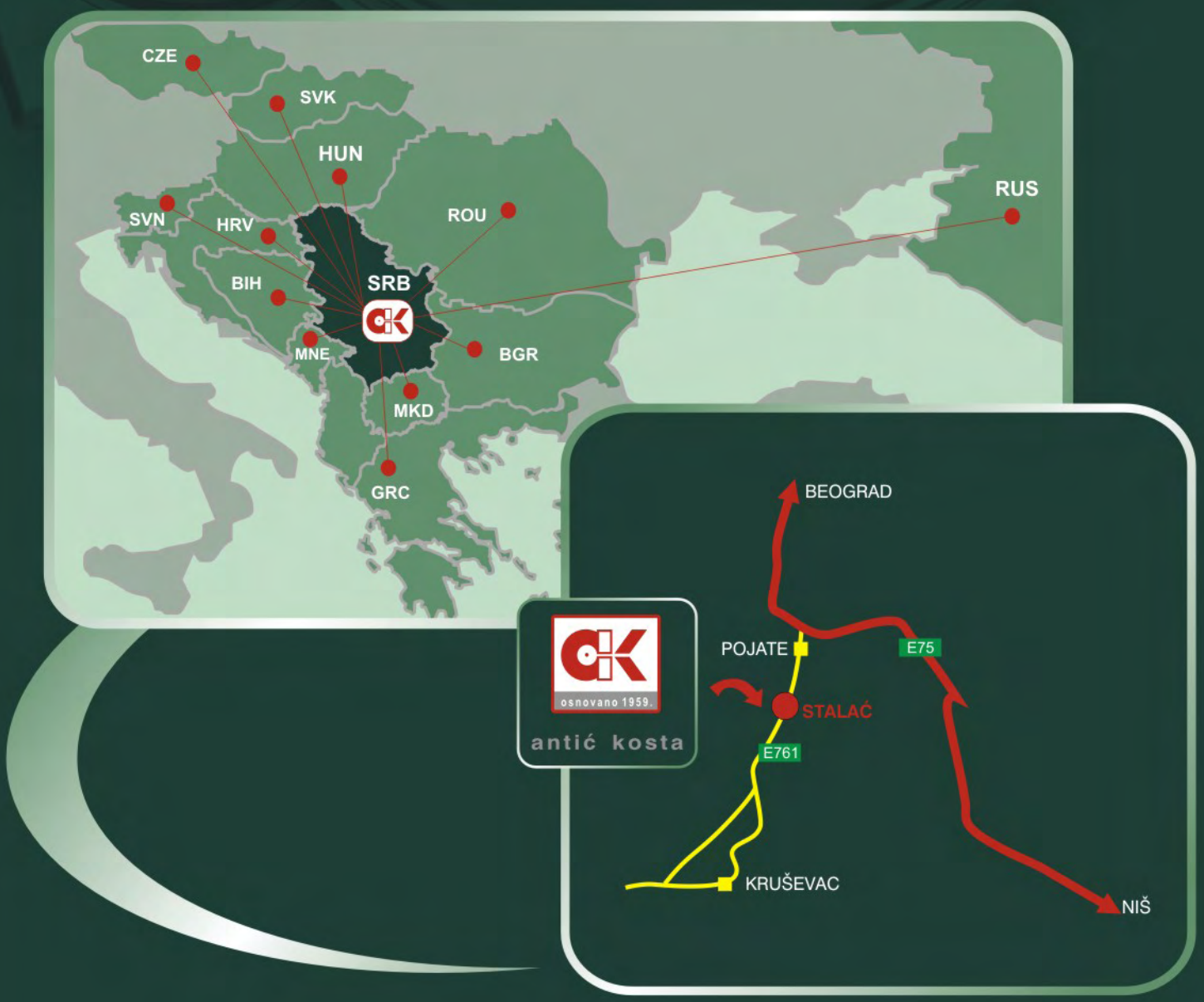

since 1959

antic kosta

The company for production, services and sales
EXPORT - IMPORT

Serbia, 37212 STALAC, V. J. Street no.66
phone/fax: +381 (37) 806-144, 806-488, 806-489
mob.: +381 (63) 620 880
e-mail: ankostalac@ptt.rs
www.antic-kosta.com